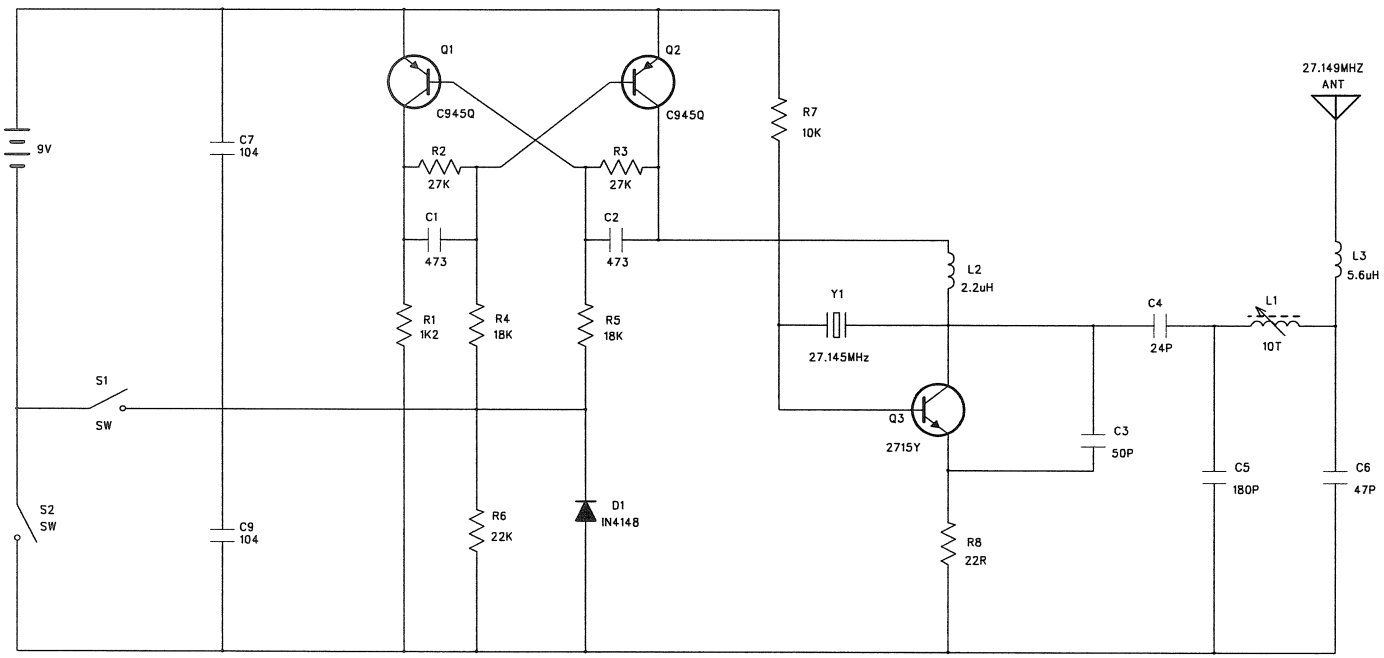

SCHEMATIC DIAGRAM		SHEET: 1 OF 1
TITLE: 8348 circuit diagram		
P/N:		SIZE: A3
DATE : 04 AUG 08		VER: 1.0
DRAWN:	APPRPVCD:	