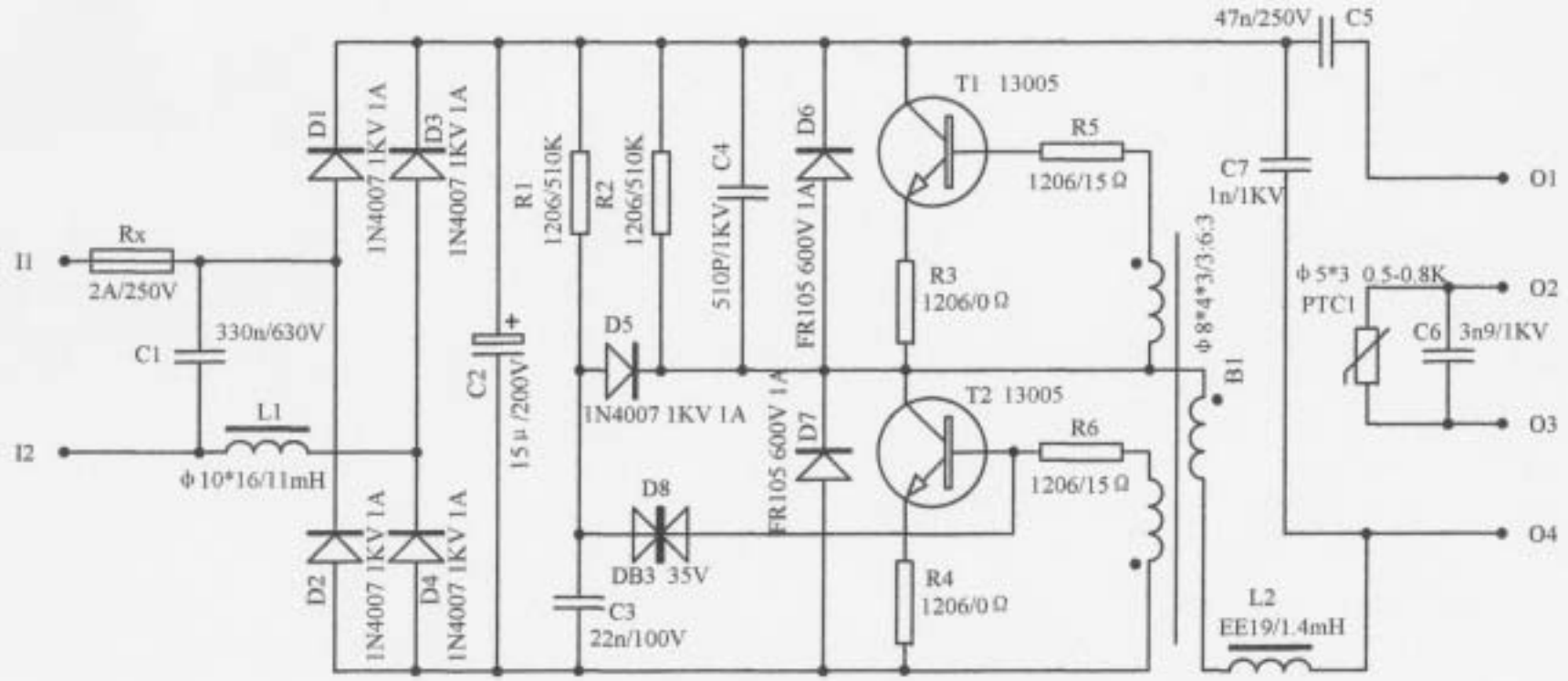

SAVIA ELECTRONICS (SUZHOU) CO.,LTD.

Title	SCHEMATIC DIAGRAM FOR AF20W		
Size B	Number		Revision
Date:	26-Feb-2003	Sheet of	
File:	F:\PCB-Gao\AE,AF,AJ.ddb	Drawn By:	