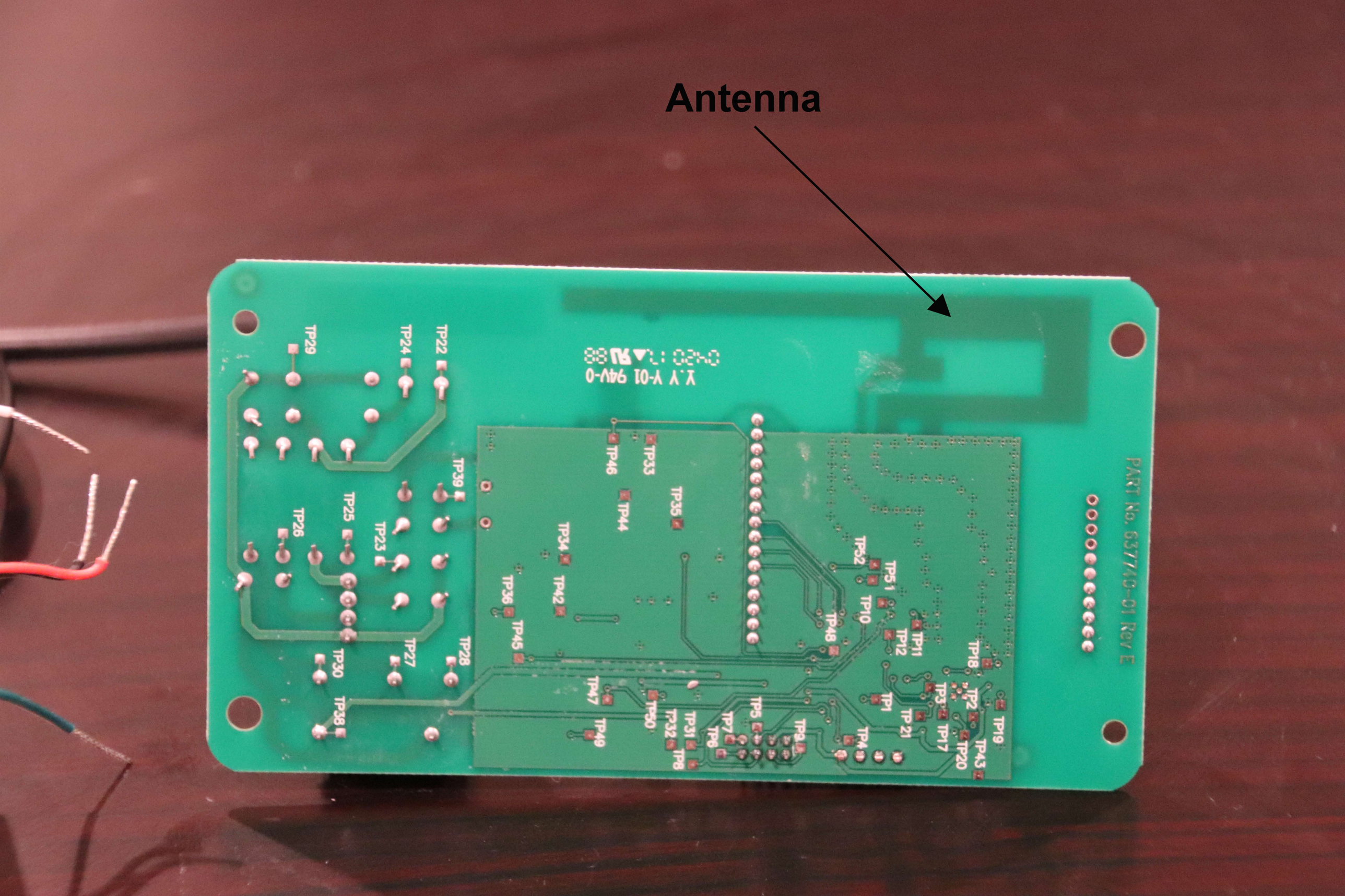
Antenna
PART No. 637740-01 Rev E
TP19
TP2
TP43
TP20
TP18
TP3
TP17
TP 21
TP1
TP4
TP11
TP12
TP5 1
TP10
TP52
TP48
TP5
TP9
TP7
TP6
TP31
TP8
TP32
TP50
TP47
TP49
TP33
TP46
TP44
TP35
TP34
TP42
TP36
TP45
TP39
TP28
TP27
TP30
TP38
TP25
TP23
TP26
TP29
TP24
TP22