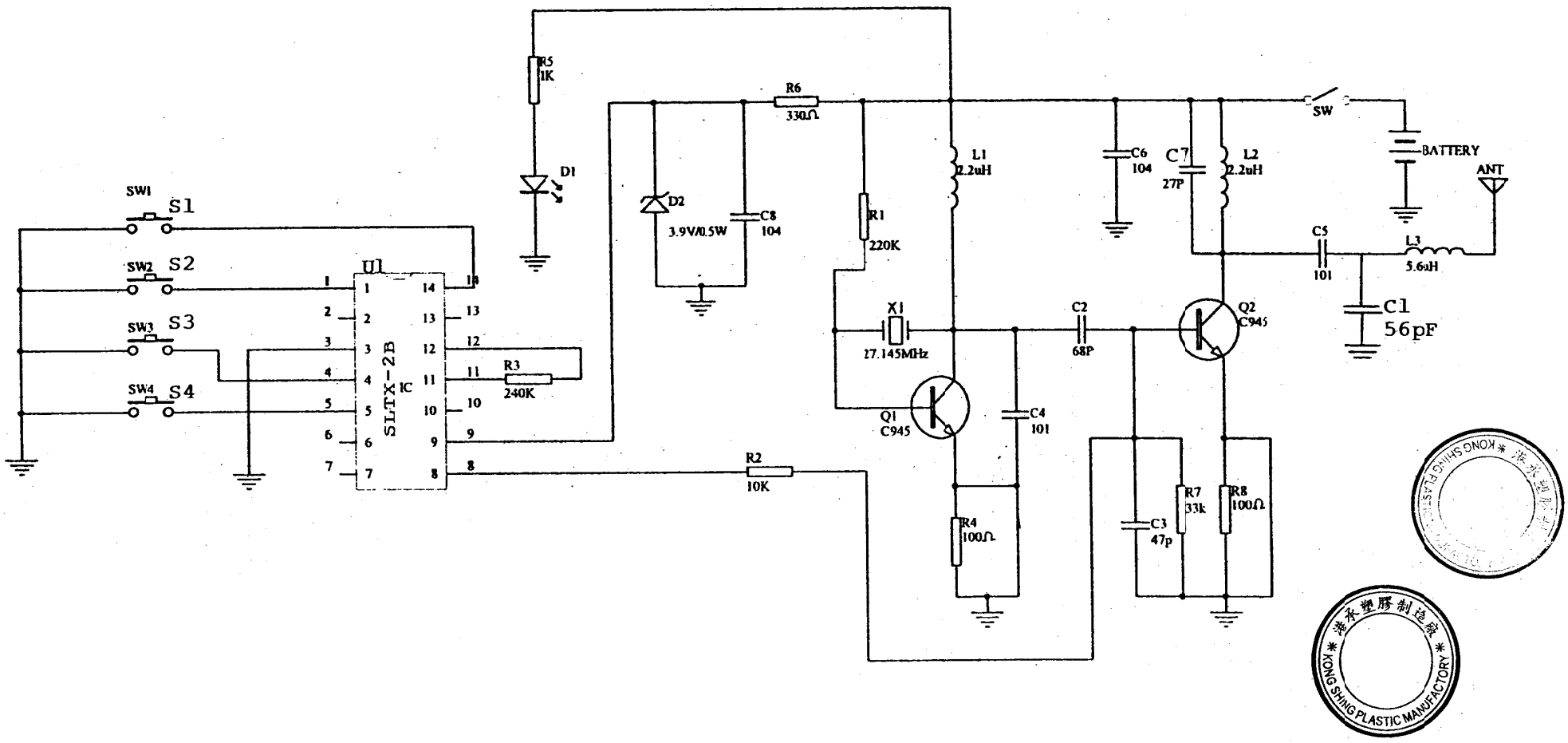
SW1
S1
SW2
S2
SW3
S3
SW4
S4
U1
SLTX-2B
IC
R5
1K
D1
D2
3.9V/0.5W
C8
104
R6
330Ω
R1
220K
X1
27.145MHz
Q1
C945
C4
101
R2
10K
R3
240K
R4
100Ω
L1
2.2uH
C6
104
C7
27P
L2
2.2uH
C2
68P
Q2
C945
C3
47p
R7
33k
R8
100Ω
SW
BATTERY
ANT
C5
101
L3
5.6uH
C1
56pF
KONG SHING PLASTIC MANUFACTORY