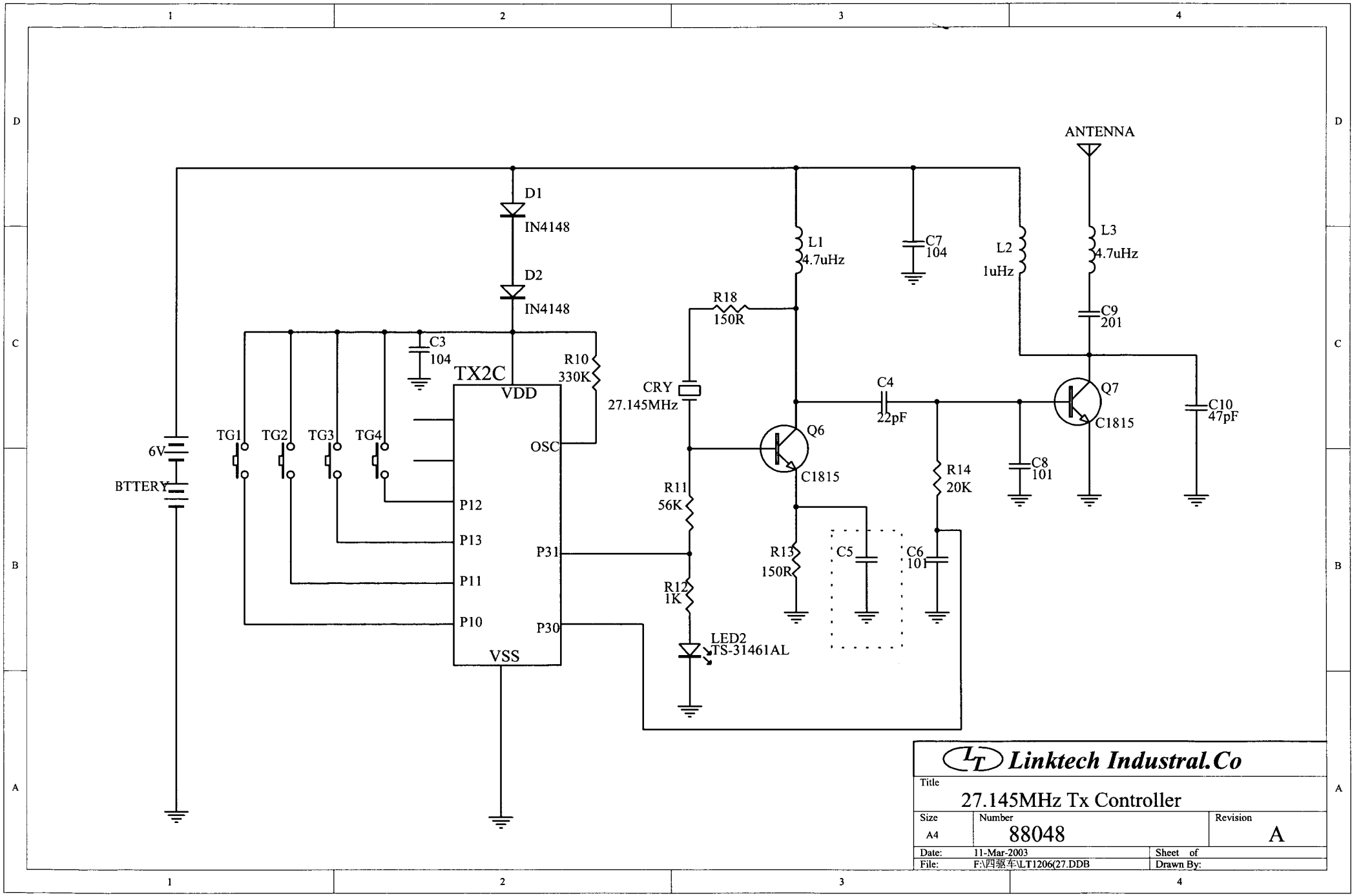
ANTENNA
D1
IN4148
D2
IN4148
L1
4.7uHz
C7
104
L2
1uHz
L3
4.7uHz
C9
201
R18
150R
C3
104
TX2C
R10
330K
VDD
CRY
27.145MHz
C4
22pF
Q7
C1815
C10
47pF
6V
BTTERY
TG1
TG2
TG3
TG4
OSC
Q6
C1815
R14
20K
C8
101
R11
56K
P12
P13
P31
P11
P10
P30
VSS
R13
150R
C5
C6
101
R12
1K
LED2
TS-31461AL
Linktech Industral.Co
Title
27.145MHz Tx Controller
Size
A4
Number
88048
Revision
A
Date:
11-Mar-2003
Sheet of
File:
F:\四驱车\LT1206(27.DDB
Drawn By: