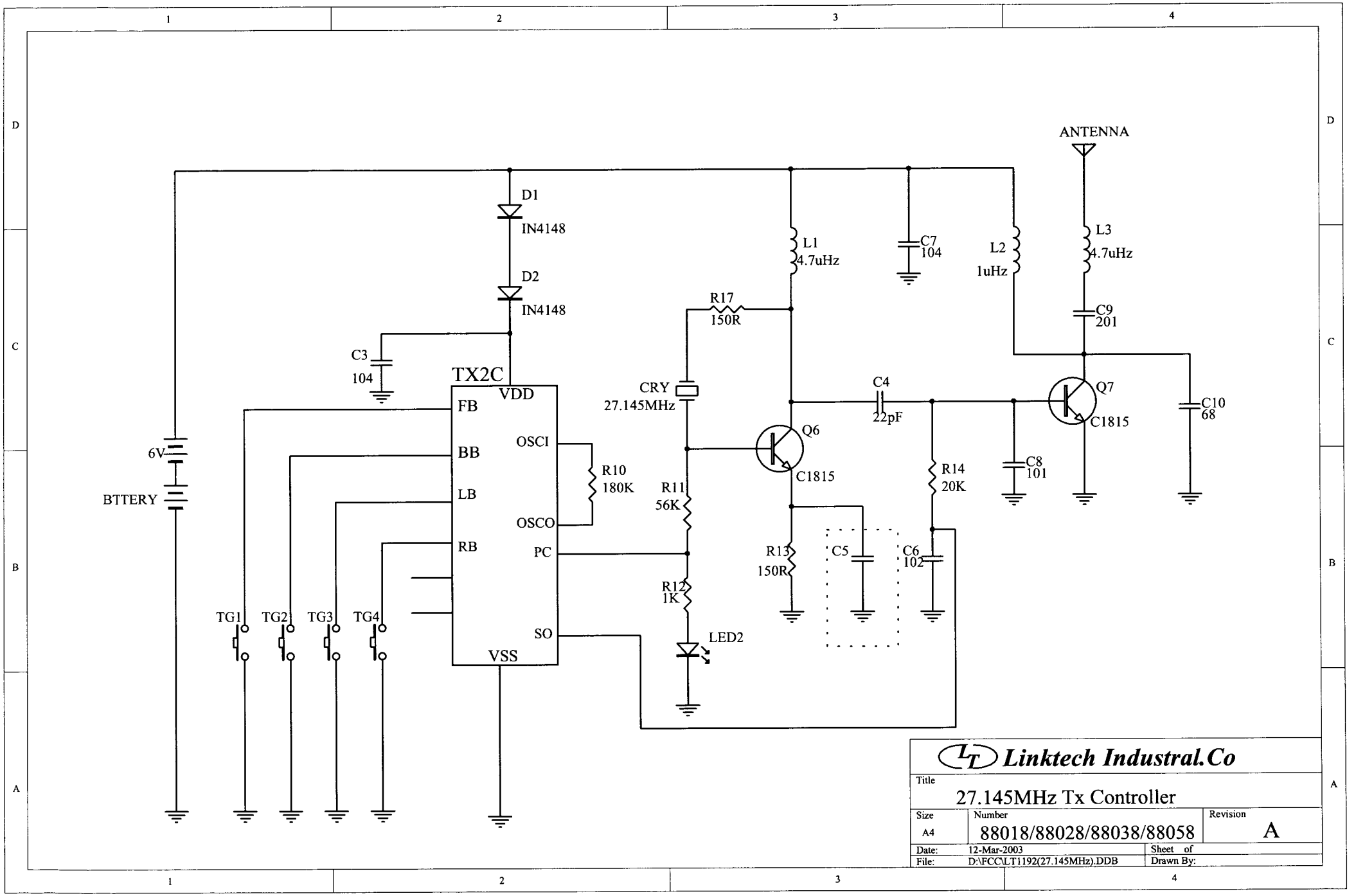
ANTENNA
D1
IN4148
D2
IN4148
C3
104
TX2C
VDD
FB
BB
LB
RB
OSCI
OSCO
PC
SO
VSS
6V
BTTERY
TG1
TG2
TG3
TG4
R10
180K
R11
56K
R12
1K
LED2
CRY
27.145MHz
R17
150R
L1
4.7uHz
C7
104
L2
1uHz
L3
4.7uHz
C9
201
C4
22pF
Q6
C1815
R13
150R
C5
C6
102
R14
20K
C8
101
Q7
C1815
C10
68
Linktech Industral.Co
Title
27.145MHz Tx Controller
Size
A4
Number
88018/88028/88038/88058
Revision
A
Date:
12-Mar-2003
Sheet of
File:
D:\FCC\LT1192(27.145MHz).DDB
Drawn By: