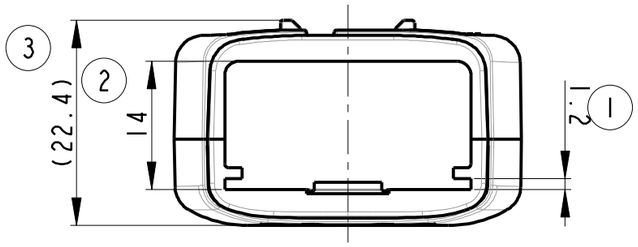

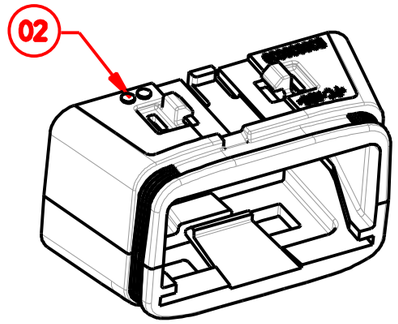

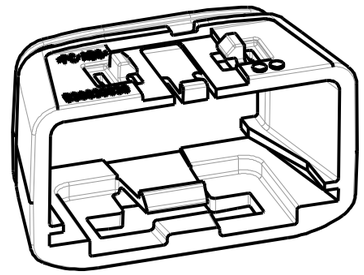

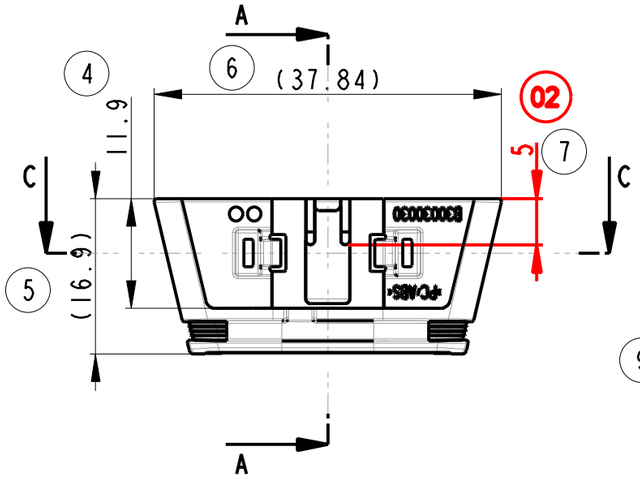

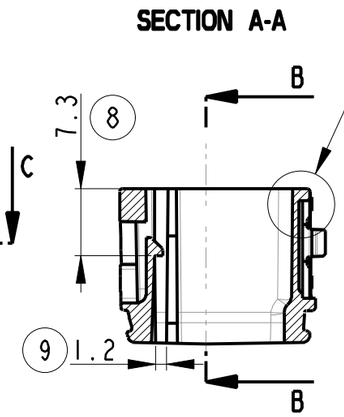

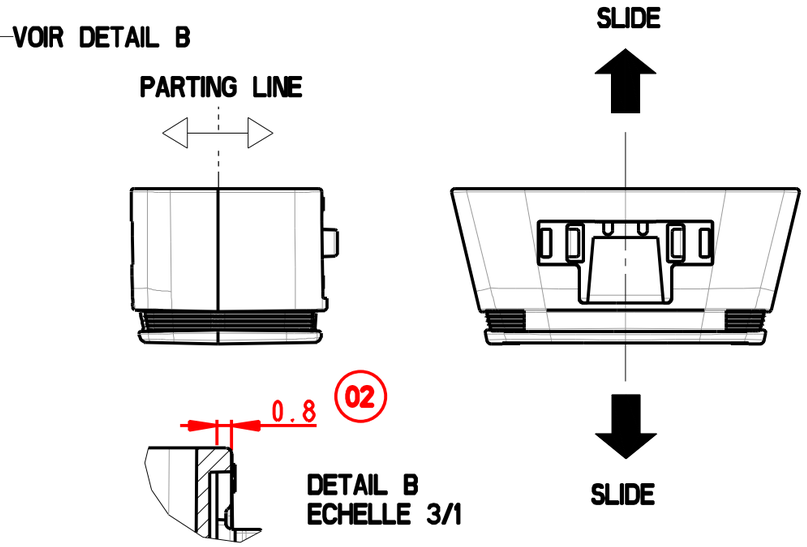

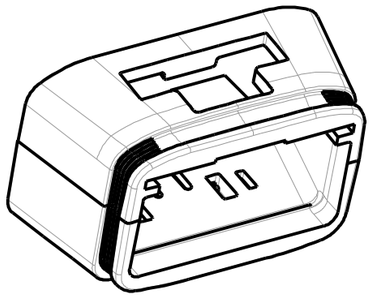

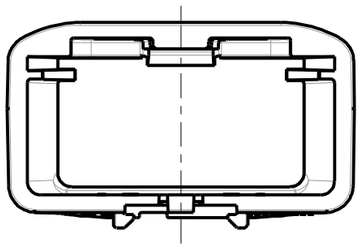

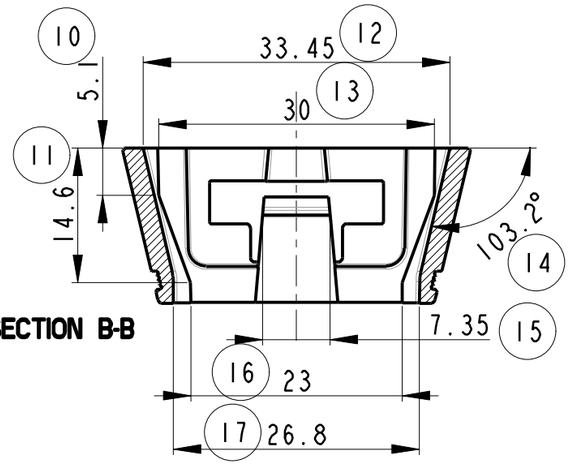

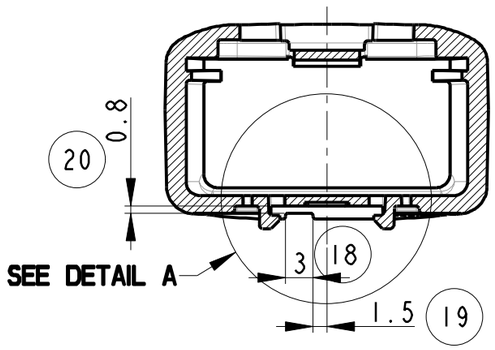

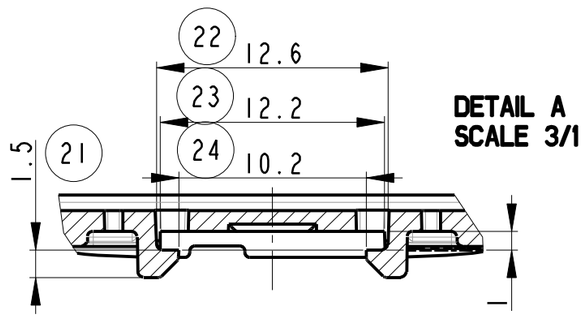

NOTA:

- Only functional dimensions are present
  The other dimensions are not indicated
- External surfaces are complex
  to be made from CAD data files:
  B30030030_DUAL_ANTENNA_SUPPORT_02.STP
- No injection, ejector or depression mark
  on visibles surfaces

Rev	Date (Date)	Dessine par (Drawn by)	Verifie par (Checked by)	Actions (Action)
02	17-Dec-08	YLM	-	. Added material . Added material . Added second point (Rev 02)
01	23-Oct-08	YLM	-	Creation

AXENA

Client (Customer): BARACODA

Dossier (Folder): ROADRUNNERS

DUAL ANTENNA SUPPORT

Tol. gnrle (Gnrl Toler.)	NFT 58000 R
Volume	3 cm3
Matiere (Material)	PC/ABS
Finition (Finish)	NO TEXTURE
Remarques (remarks)	COLOR: BLACK

Ce document est la propriete d'AXENA et ne peut etre communique ou duplique sans son autorisation ecrite. This document is the property of AXENA. Duplication or communication without written authorization is prohibited. (c) 2004

Format (Size) A3 | Ech. (Scale) 3/2 | Planche (Sheet) 1/1 | B30030030 | 02

6, Parc des Fontenelles 78870 Bailly FRANCE - Tel : 33 (0) 1 30 80 56 10 - Fax : 33 (0) 1 30 80 49 20 - Internet : www.axena.fr - E-Mail : axena@axena.fr

PDF created with pdfFactory Pro trial version www.pdffactory.com