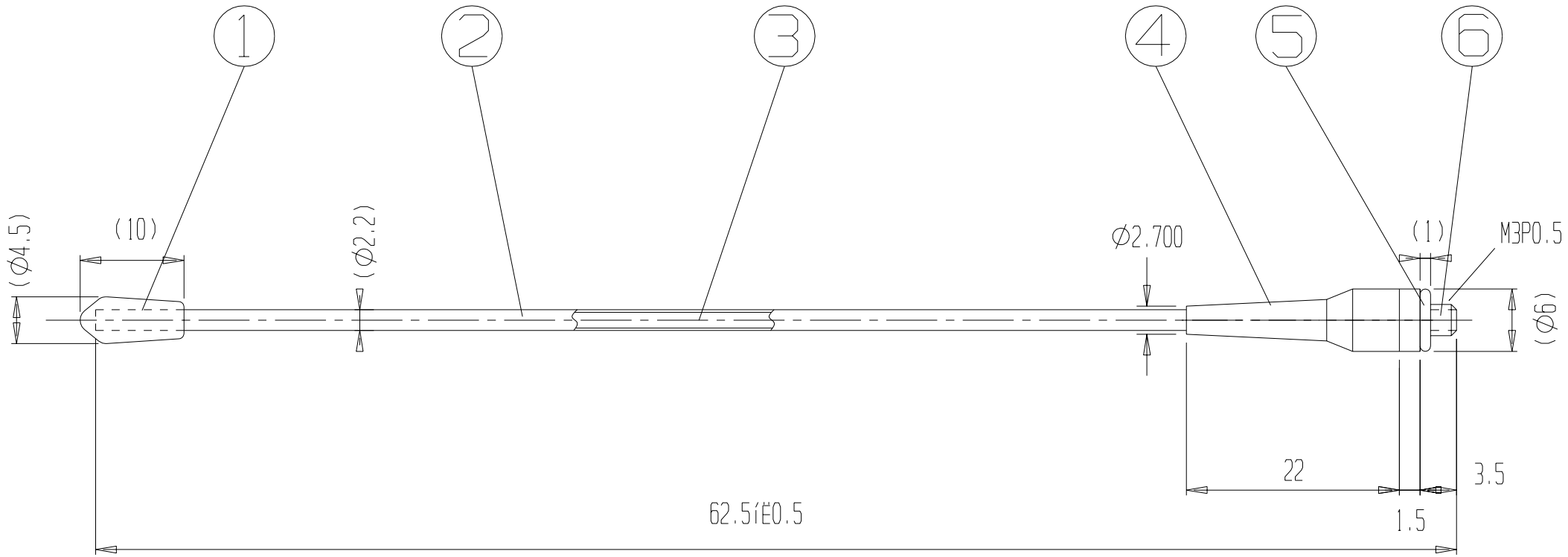

ANTNNA GAIN: +2dBi

6	BASE	BSBM	1	Cu/Nib[1]							
5	O RING	RUBBER	1	BLACK							
4	SLEEVE	TPU 85A	1	BLACK							
3	STEEL WIRE	SWRM	1		STAYSAIL						
2	TUBE	PU	1	BLACK	SCALE zoom						
1	HEAD	PVC	1	BLACK	UNIT mm						
SIGN	NOTE	METERIAL	Q' T Y / SET	MFG'	TOLERANCE ± 0.2	SIGN	DATE	REVISION		DRW	CHECK

DRW	CHECK	RECOG'	DATE	DIAGRAM NUMBER	DIAGRAM NAME	TYPE
			2003.03.03	YH910807	Rubber An't	04004-GWD900T004-00