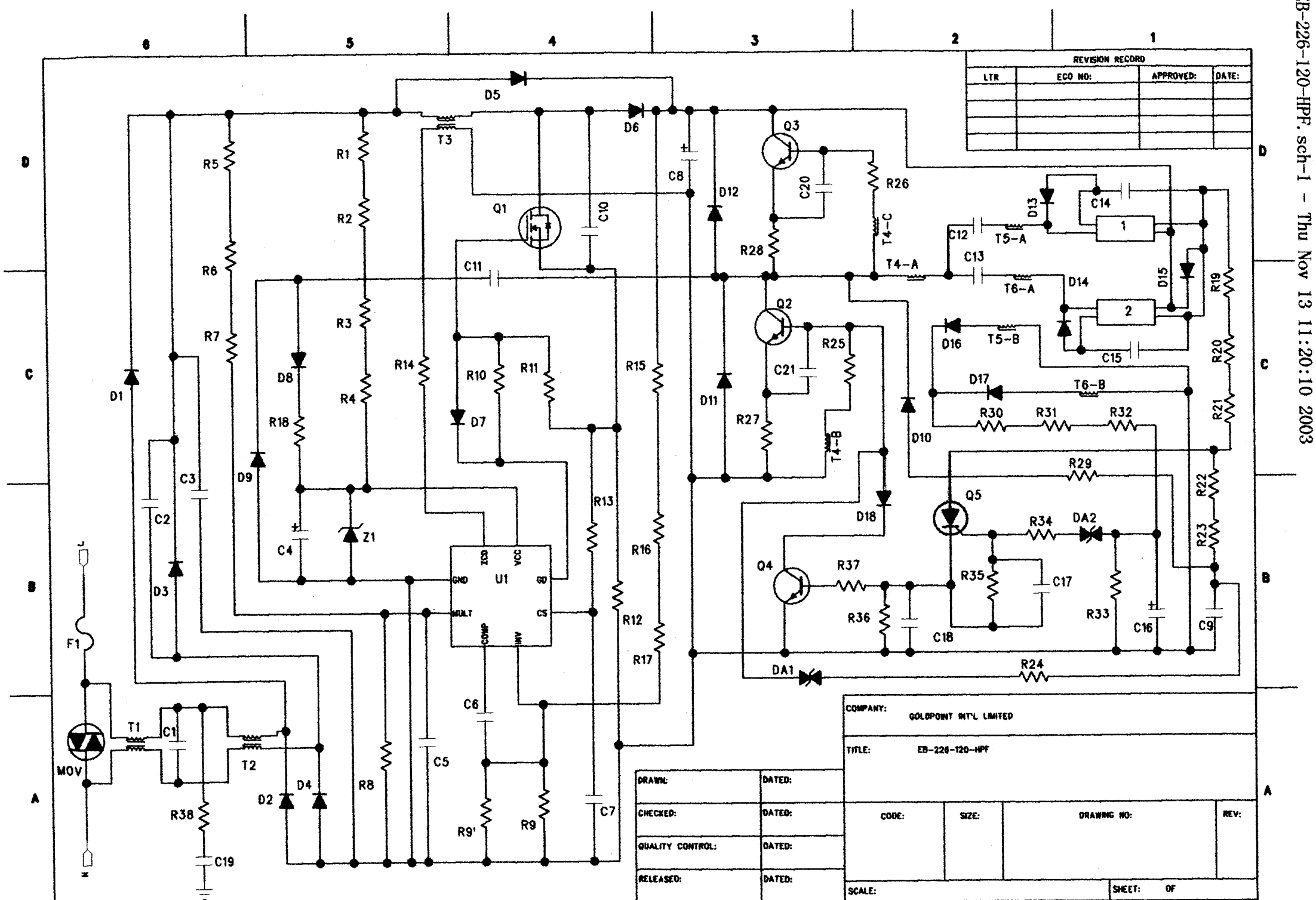
REVISION RECORD
LTR
ECO NO:
APPROVED:
DATE:
COMPANY:
GOLDPOINT INT'L LIMITED
TITLE:
EB-226-120-HPF
DRAWN:
DATED:
CHECKED:
DATED:
QUALITY CONTROL:
DATED:
RELEASED:
DATED:
CODE:
SIZE:
DRAWING NO:
REV:
SCALE:
SHEET:
OF
U1
GND
MULT
COMP
INV
ICS3
VCC
GD
CS
Q1
Q2
Q3
Q4
Q5
T1
T2
T3
T4-A
T4-B
T4-C
T5-A
T5-B
T6-A
T6-B
MOV
F1
L
N
DA1
DA2
Z1
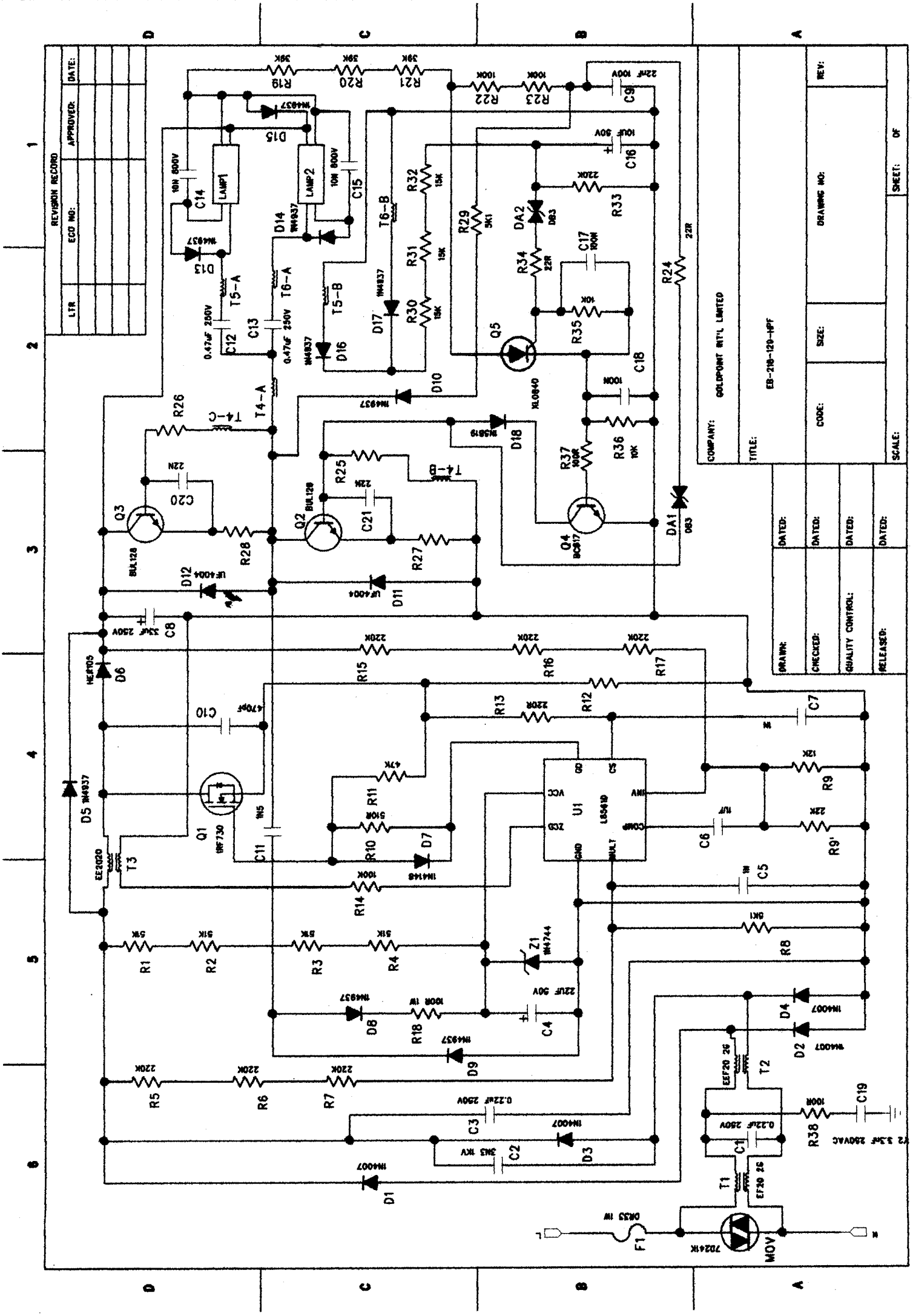
EB-218-120-HPF.sch-1 - Thu Nov 13 11:27:05 2003