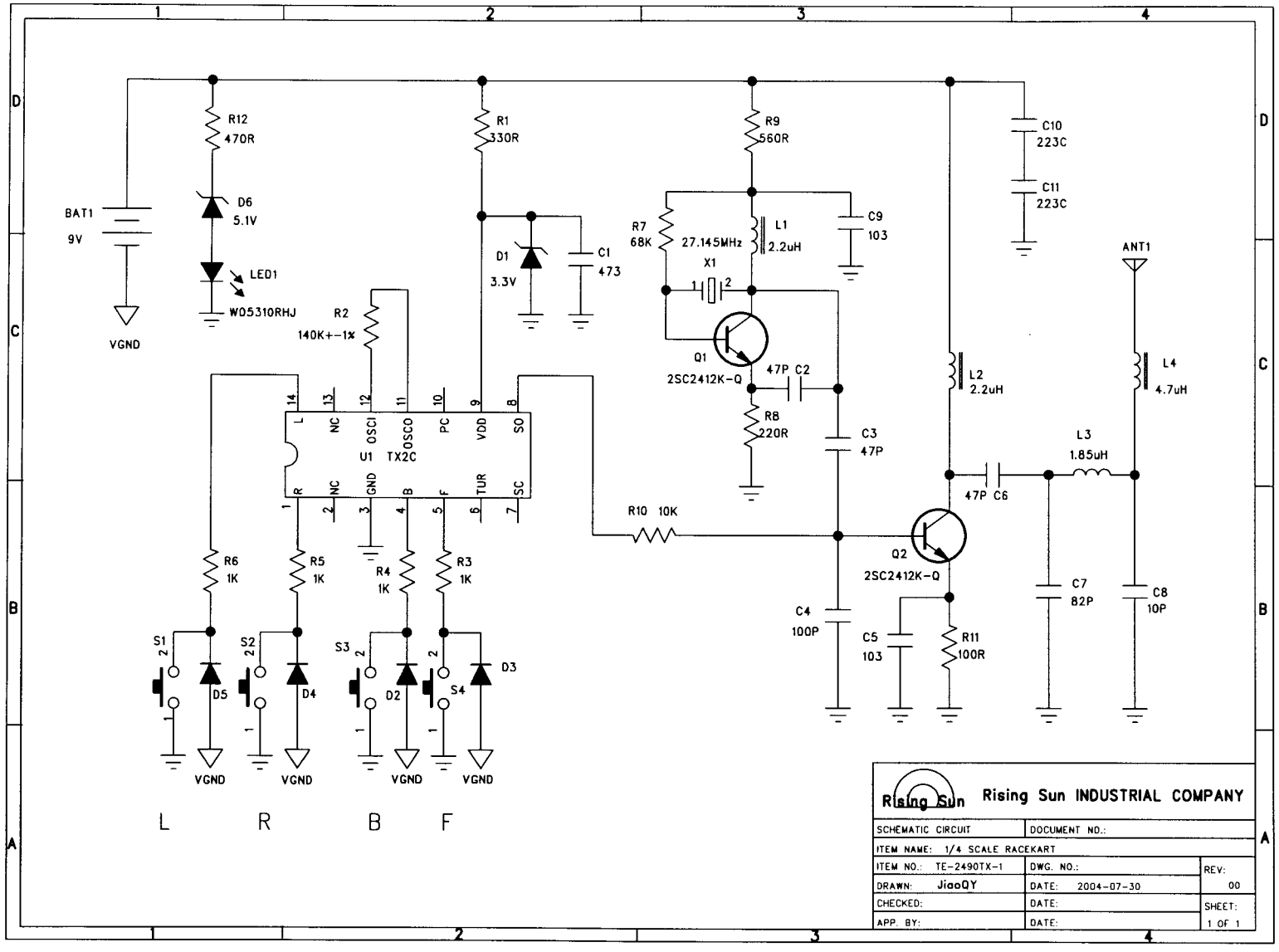
BAT1
9V
VGND
R12
470R
D6
5.1V
LED1
W05310RHJ
R1
330R
D1
3.3V
C1
473
R2
140K+-1%
U1 TX2C
L
NC
OSCI
OSCO
PC
VDD
SO
R
NC
GND
B
F
TUR
SC
R6
1K
R5
1K
R4
1K
R3
1K
S1
S2
S3
S4
D5
D4
D2
D3
L
R
B
F
R7
68K
27.145MHz
X1
L1
2.2uH
R9
560R
C9
103
Q1
2SC2412K-Q
47P C2
R8
220R
C3
47P
R10 10K
C4
100P
C5
103
R11
100R
Q2
2SC2412K-Q
C10
223C
C11
223C
L2
2.2uH
47P C6
L3
1.85uH
C7
82P
C8
10P
ANT1
L4
4.7uH
Rising Sun
Rising Sun INDUSTRIAL COMPANY
SCHEMATIC CIRCUIT
DOCUMENT NO.:
ITEM NAME: 1/4 SCALE RACEKART
ITEM NO.: TE-2490TX-1
DWG. NO.:
REV: 00
DRAWN: JiaoQY
DATE: 2004-07-30
CHECKED:
DATE:
SHEET: 1 OF 1
APP. BY:
DATE: