LET	REVISIONS	DATE
D	EC2398 REDRAWN	8-2-00

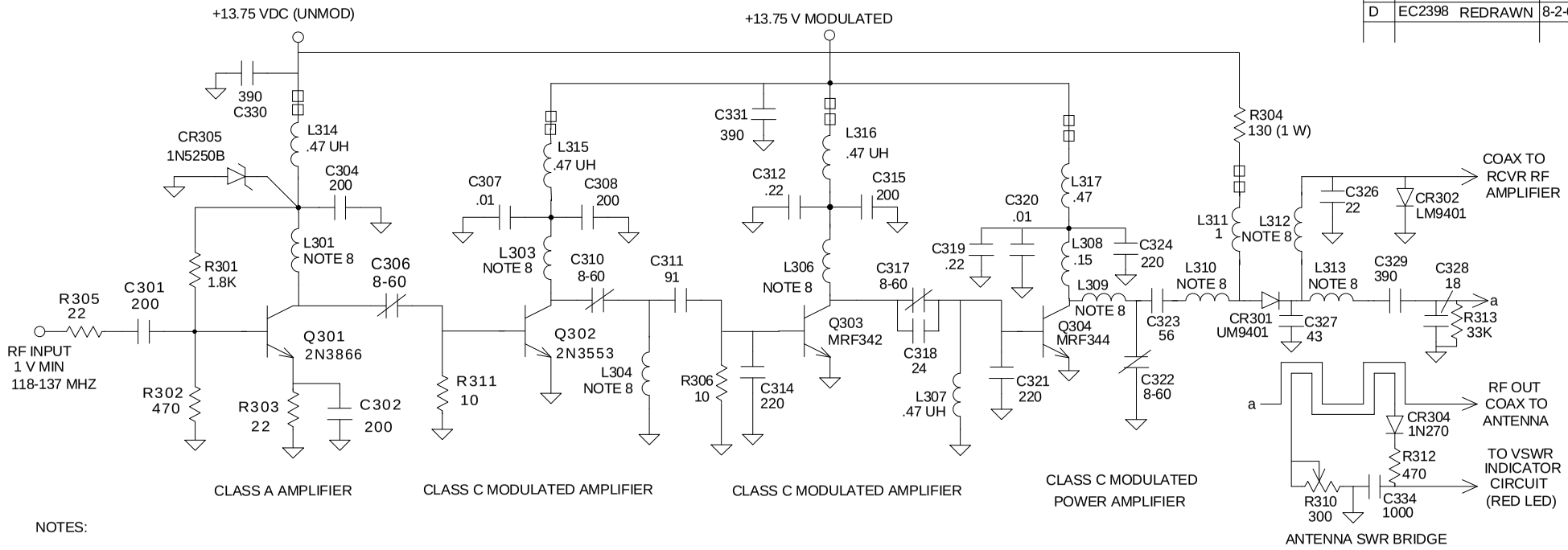

NOTES:

1. ALL RESISTANCES IN OHMS (K=1000)
   ALL 1/4 W UNLESS OTHERWISE NOTED
   A. LAST ASSIGNED: R313
   B. NOT ASSIGNED: R307
2.. CAPACITOR VALUES: WHOLE NUMBERS ARE PICOFARADS, DECIMALS ARE MICROFARADS
   A. LAST ASSIGNED: C334
   B. NOT ASSIGNED: C303, C305, C309, C316, C325, C332
3. ALL INDUCTANCES ARE IN MICROHENRIES
4. ALL 220 PF CAPACITORS ARE SURFACE MOUNT
5. ⊕ MEANS FERRITE BEAD (P/N 1100483 OVER WIRE.
6. L314, L315, L316 AND L317 ARE SIZE 15 MOLDED INDUCTORS WITH DC RESISTANCE = .088 OHMS. STAGE CURRENTS MAY BE CALCULATED BY MEASURING VOLTAGES ACROSS THESE INDUCTORS.
7. LEAD LENGTHS OF ALL CAPACITORS ARE CRITICAL. FOR C311, LENGTH IS 3/16" EA. LEAD. ALL OTHERS, LENGTH IS 1/8" EA. LEAD.
8. INDUCTORS WITHOUT VALUES ARE ETCHED ONTO PC BOARD, AS FOLLOWS:

IDENTIFIER	APPROX. LENGTH	APPROX. VALUE
L301	5.3"	.095
L303	3.9"	.07
L304	0.6"	.01
L306	1.3"	.02
L309	1.8"	.03
L310	2.1"	.04
L312	2.9"	.05
L313	4.2"	.075

USED ON MODEL MB ASSEMBLY IS 4101250

REV			MENTOR RADIO COMPANY		
LET	DATE	EC	SCHEMATIC 10 WATT RF POWER AMPLIFIER		
			DWN JWS	SCALE	DWG NO.
			APP	DATE 8-2-00	4101207