Air-X1000 (REMORT RF BOARD) CIRCUIT

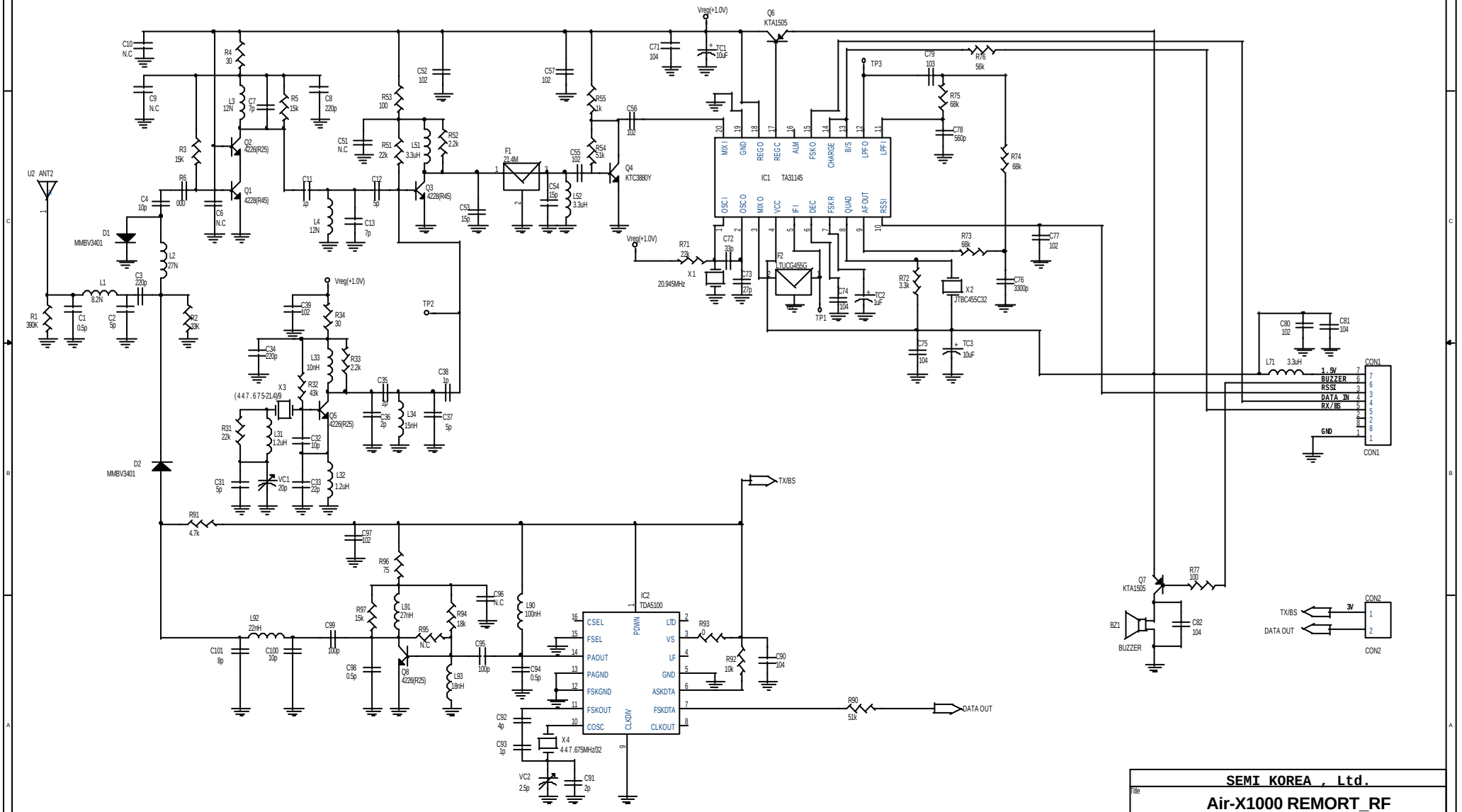

SEMI KOREA , Ltd.		
Title: Air-X1000 REMORT_RF		
Size: A3	Document Number: PCB DATE _ 2002.8.9	Rev: A
Date: Monday, September 23, 2002	Sheet 1 of <Doc>	
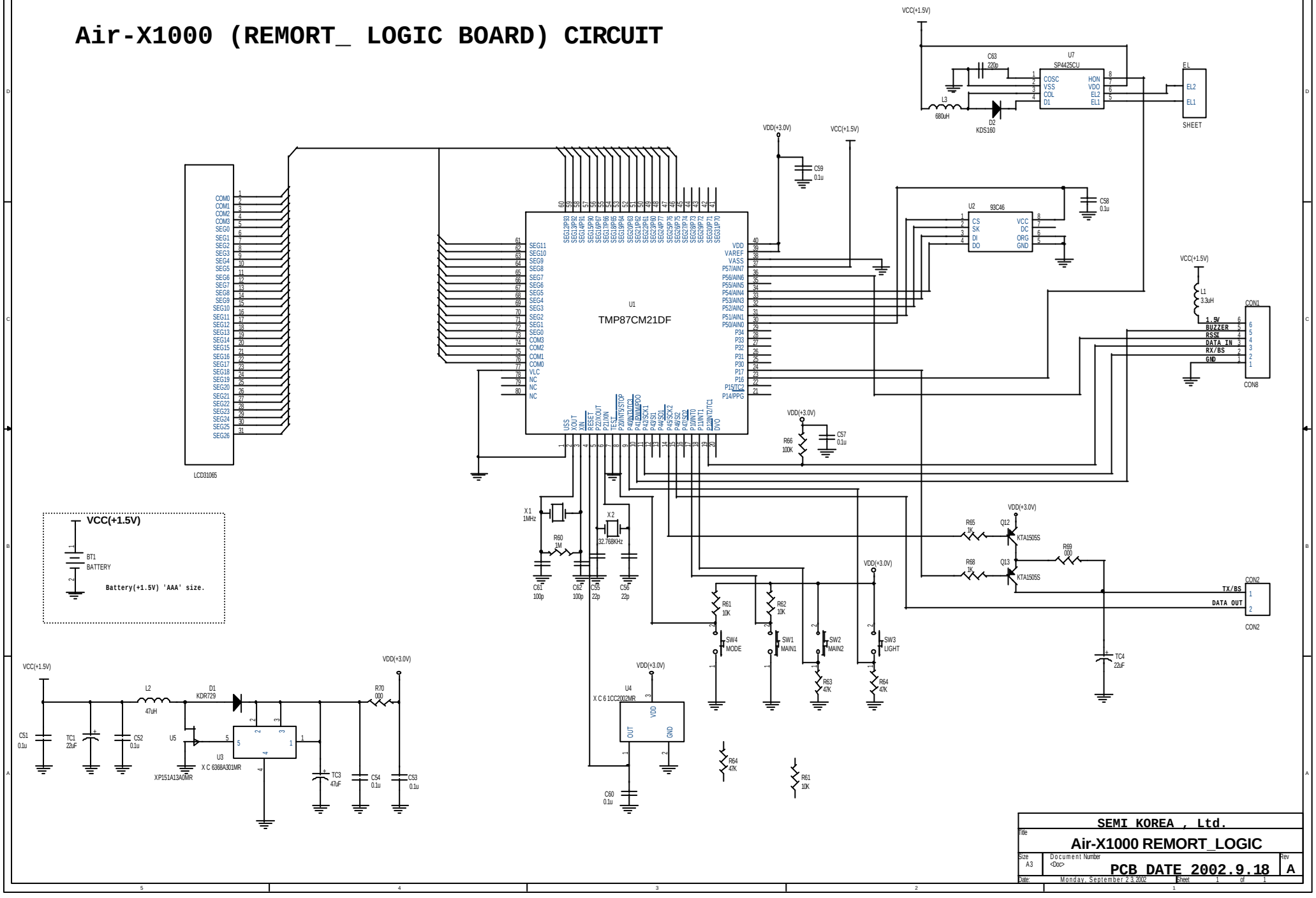
Air-X1000 (REMORT_ LOGIC BOARD) CIRCUIT