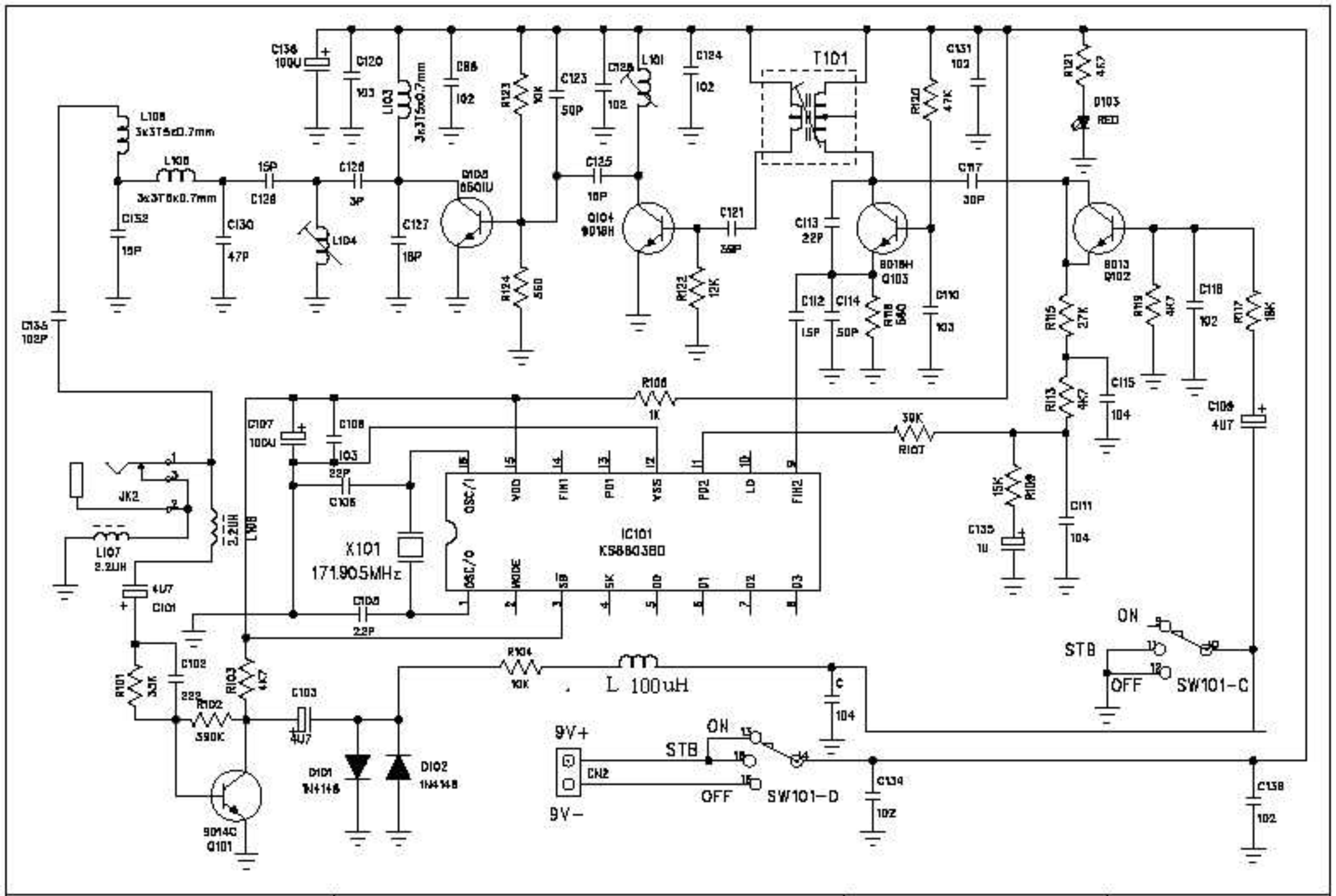

COMPANY:	DESCRIPTION: 112 VHF MIC TX	MODEL NO.:	REV.: