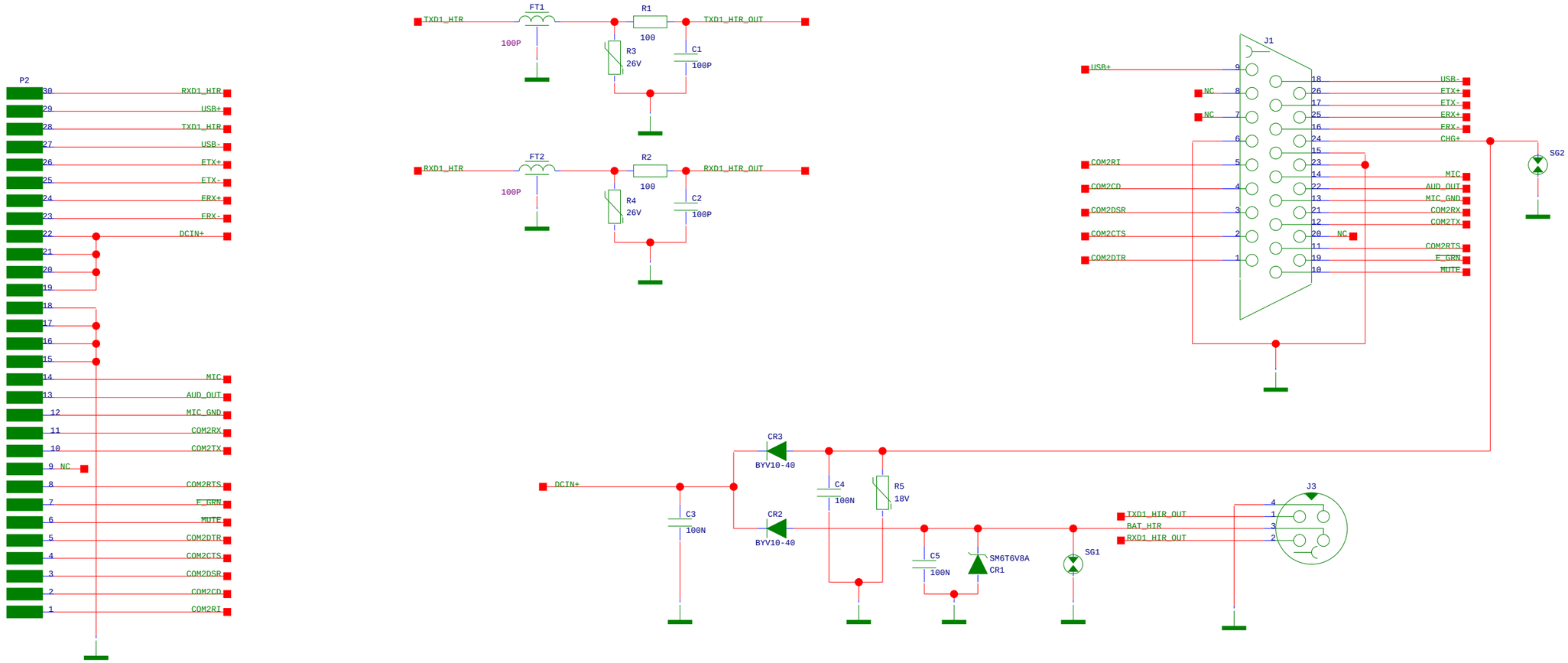

Trimble AB Danderyd	ART NO. 571 225 580		
	COMPONENT POS. DWG. 571 225 581		REV. B00
CHK	DATE	CIRCUIT DIAGRAM SCB(SIDE CONNECTOR. BOARD)	
ENG CHWA			
DEP 213			
NEXT HIGHER ASSY. -		SIZE A3	DWG NO. 571 225 582 / REV. B00
6-6-2002_9:28		SCBB00	SHEET 1 OF 1

REV

Trimble AB

This document must not be copied, either completely or in part, without our permission. Any infringement will lead to legal proceedings