ATTACHMENT C.

BLOCK DIAGRAM

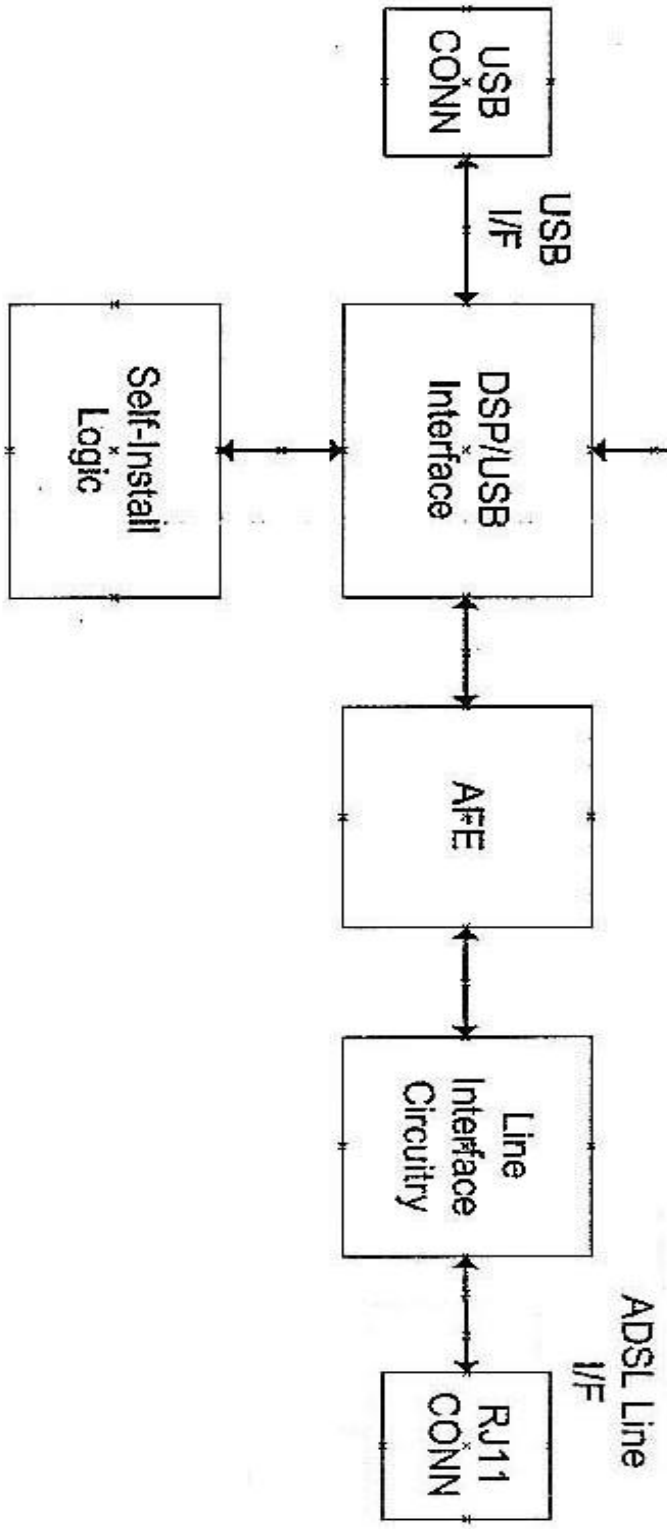

HASU-240 Block Diagram