BB SCHEMETIC

1. Contents
2. GPIO MAP
3. Hi3620V100
4. Hi3620V100
5. Hi3620V100
6. Hi3620V100
7. Hi3620V100
8. RESERVED
9. Hi6421V200
10. Hi6421V200
11. 8/16GB eMMC AND LPDDR
12. RESERVED
13. Battery/Vabrator
14. Receiver/MIC
15. 3.5 Headphone port
16. LCD interface
17. ISP Module Circuits
18. Main Camera and Slave Camera
19. USB/Charge management
20. Sensor/Status indicator
21. SIM/TF card
23. HDMI Connector
24. Test Points/JTAG/Shields
25. IMC PMU
26. IMC Memory Interface
27. IMC Interface and GPIO
28~30. RESERVED
31. MHL
32~41. RESERVED
42. PRIMARY and DIVERSITY ANTENNA
43. RF Engine UE2
44. RF POWER SUPPLY
45~54. RESERVED
55. GPS & BT/WLAN FRONTEND
56. GPS&BT/WLAN MODULE
57. NFC
57~60. RESERVED

The type and specification of the components refer to the BOM

				NA	2012.06.05
				ECA NO	DATE
DESIGNED	LIPENG 00203199	HD1U9510MT		6714078_SCH2ZH	
REVIEWED	CHAOKANGJIE 00132205				
		VER	PART_NUMBER	SHEET 1 OF 60	
		A	03021TXV	HUAWEI TECH CO.,LTD.	

The type and specification of the components refer to the BOM

				NA	2012.06.05
				ECA NO	DATE
DESIGNED	LIPENG 00203199	HD1U9510MT		6714078_SCH2ZH	
REVIEWED	CHAOKANGJIE 00132205				
		VER	PART_NUMBER	SHEET 2 OF 60	
		A	03021TXV	HUAWEI TECH CO.,LTD.	

3. Hi3620

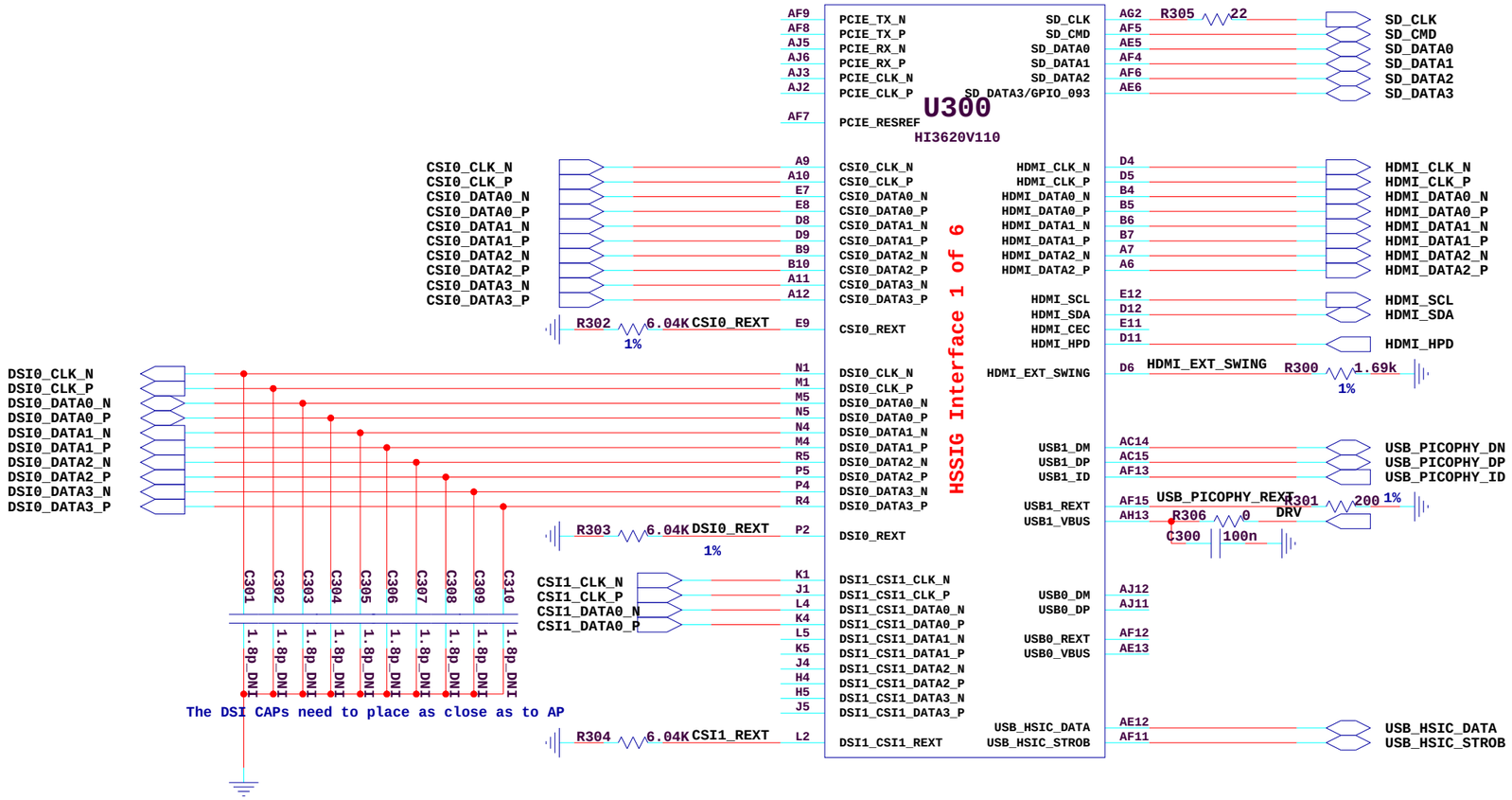

Hi3620v110 high speed siganl

The type and specification of the components refer to the BOM

				NA	2012.06.05
				ECA NO	DATE
DESIGNED	LIPENG 00203199	HD1U9510MT		6714078_SCH2ZH	
REVIEWED	CHAOKANGJIE 00132205				
		VER	PART_NUMBER	SHEET 3 OF 60	
		A	03021TXV	HUAWEI TECH CO.,LTD.	

4. Hi3620

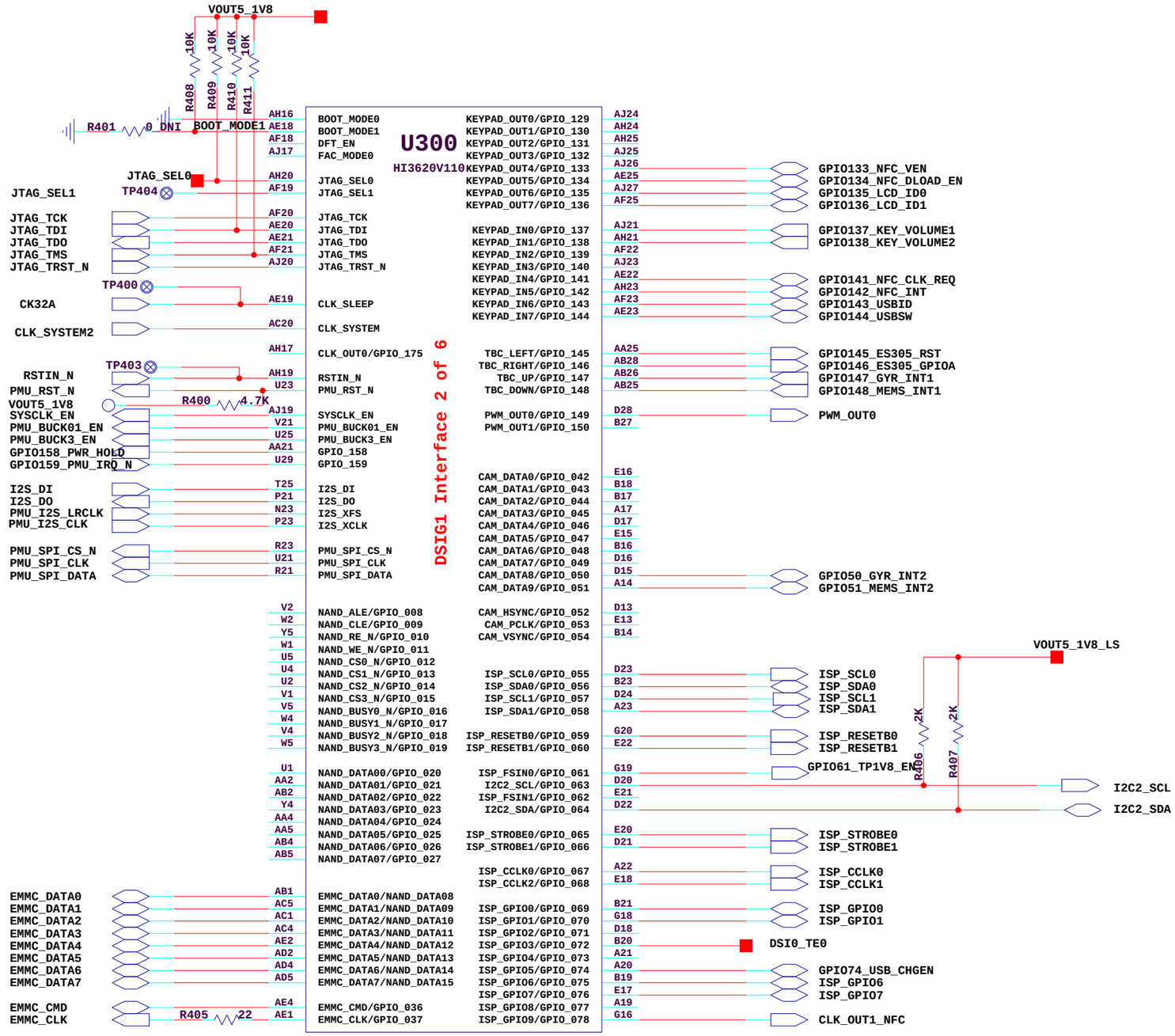

JTAG Selection setting

SEL0(ISU)	SEL1(ISD)	FUNCTION
0	0	SOC TAP
1	0	ARM COTEX A9
0	1	DAISY CHAIN
1	1	ARM TAP

Boot Mode Configuration

BOOT0(ICU)	BOOT1(ICU)	FUNCTION
0	0	Bootrom start-load
1	0	Bootrom start-nand start
0	1	Bootrom start-eMMC start
1	1	EX-nand start

Hi3620v110 digital siganl 1

The type and specification of the components refer to the BOM

				NA	2012.06.05
				ECA NO	DATE
DESIGNED	LIPENG 00203199	HD1U9510MT		6714078_SCH2ZH	
REVIEWED	CHAOKANGJIE 00132205				
		VER	PART_NUMBER	SHEET 4 OF 60	
		A	03021TXV	HUAWEI TECH CO.,LTD.	

5. Hi3620

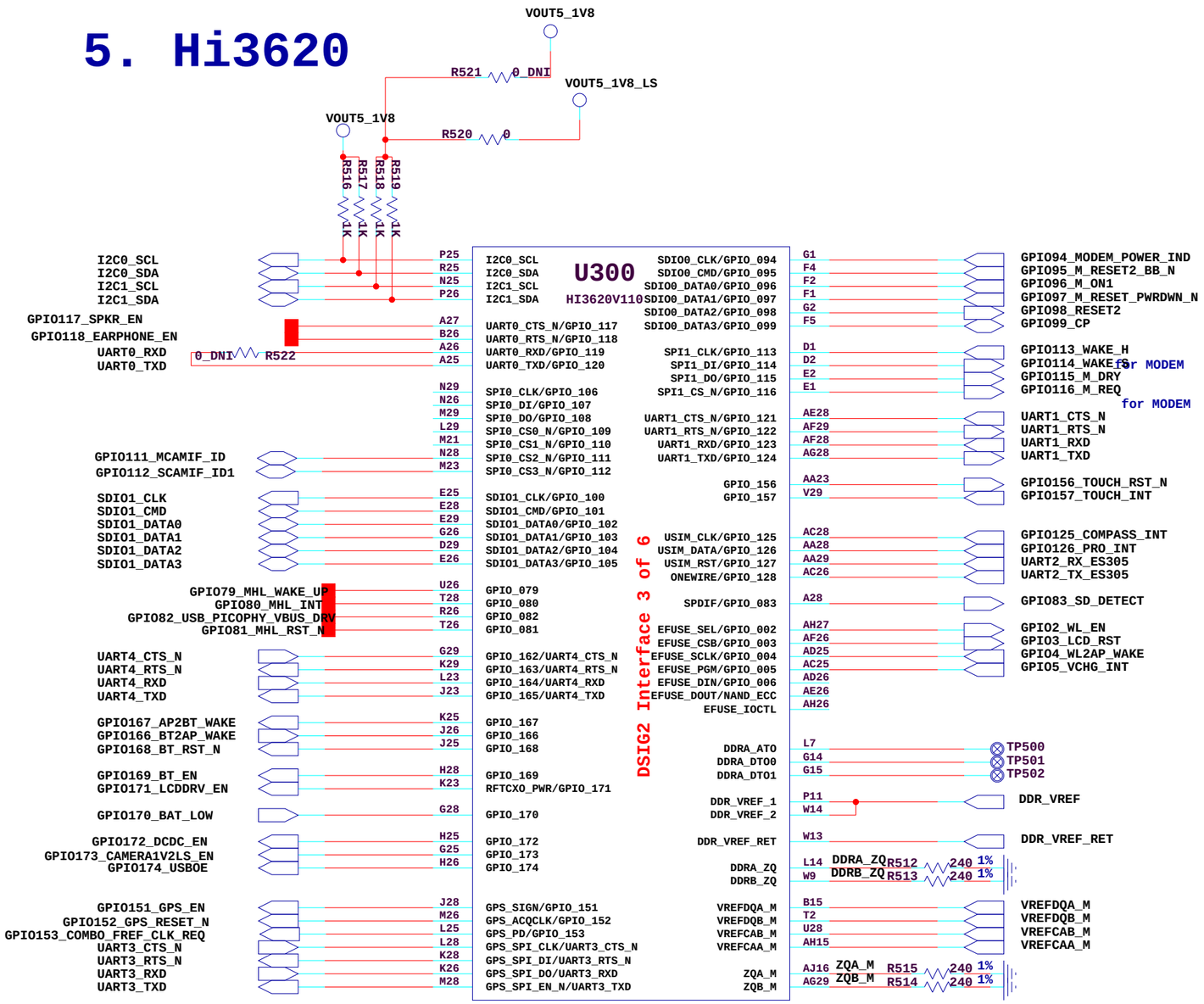

DDR_VREFDQ_M/DDR_VREFCA_M divider(from BUCK4)

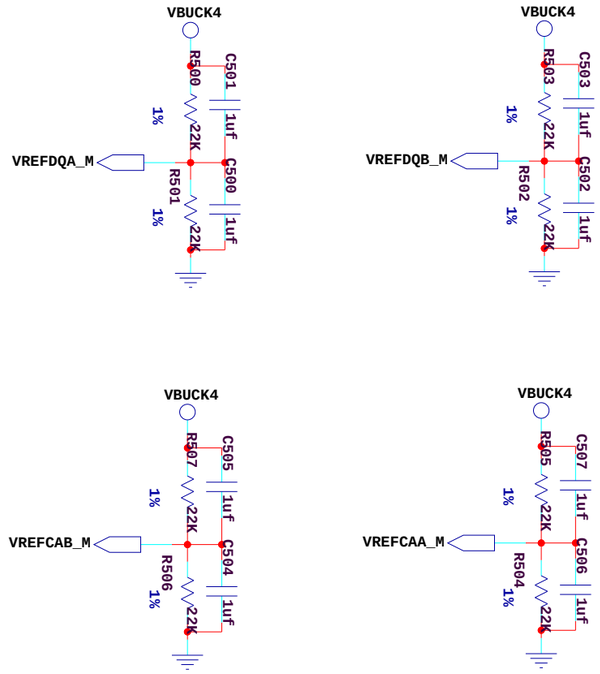

DDR_VREF divider(from LDO3) DDR_VREF_RET divider(from BUCK4)

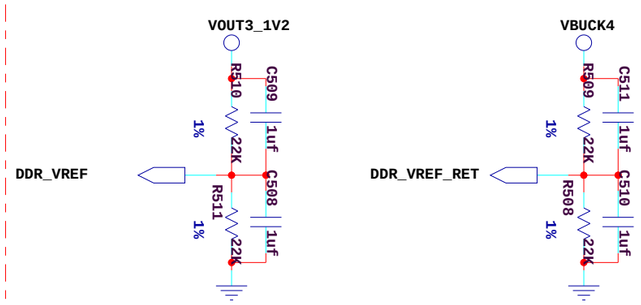

Hi3620v110 digital siganl 2

The type and specification of the components refer to the BOM

				NA	2012.06.05
				ECA NO	DATE
DESIGNED	LIPENG 00203199	HD1U9510MT		6714078_SCH2ZH	
REVIEWED	CHAOKANGJIE 00132205				
		VER	PART_NUMBER	SHEET 5 OF 60	
		A	03021TXV	HUAWEI TECH CO.,LTD.	

6. Hi3620

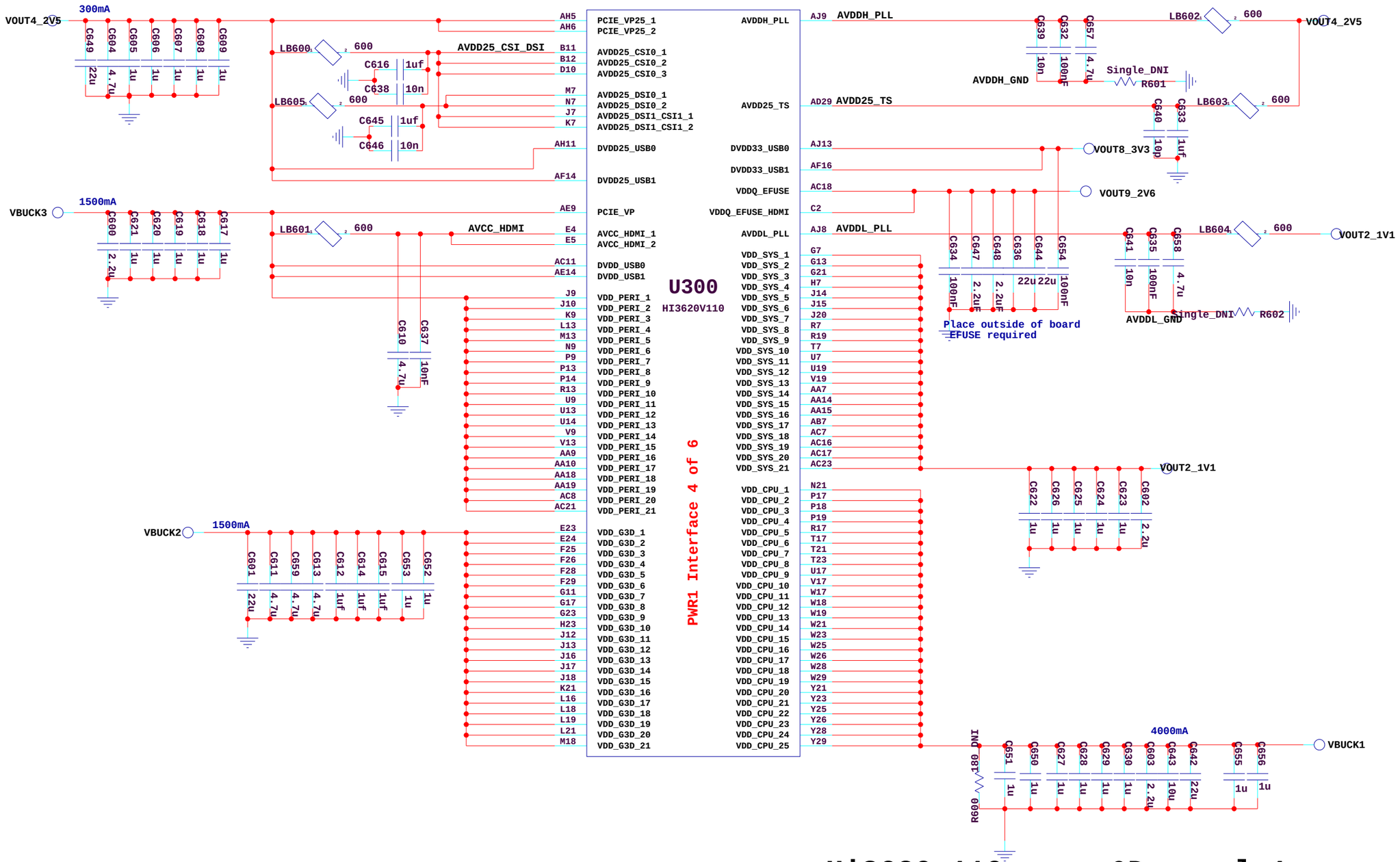

Hi3620v110 power&Decouple1

The type and specification of the components refer to the BOM

				NA	2012.06.05
				ECA NO	DATE
DESIGNED	LIPENG 00203199	HD1U9510MT		6714078_SCH2ZH	
REVIEWED	CHAOKANGJIE 00132205				
		VER	PART_NUMBER	SHEET 6 OF 60	
		A	03021TXV	HUAWEI TECH CO.,LTD.	

7. Hi3620

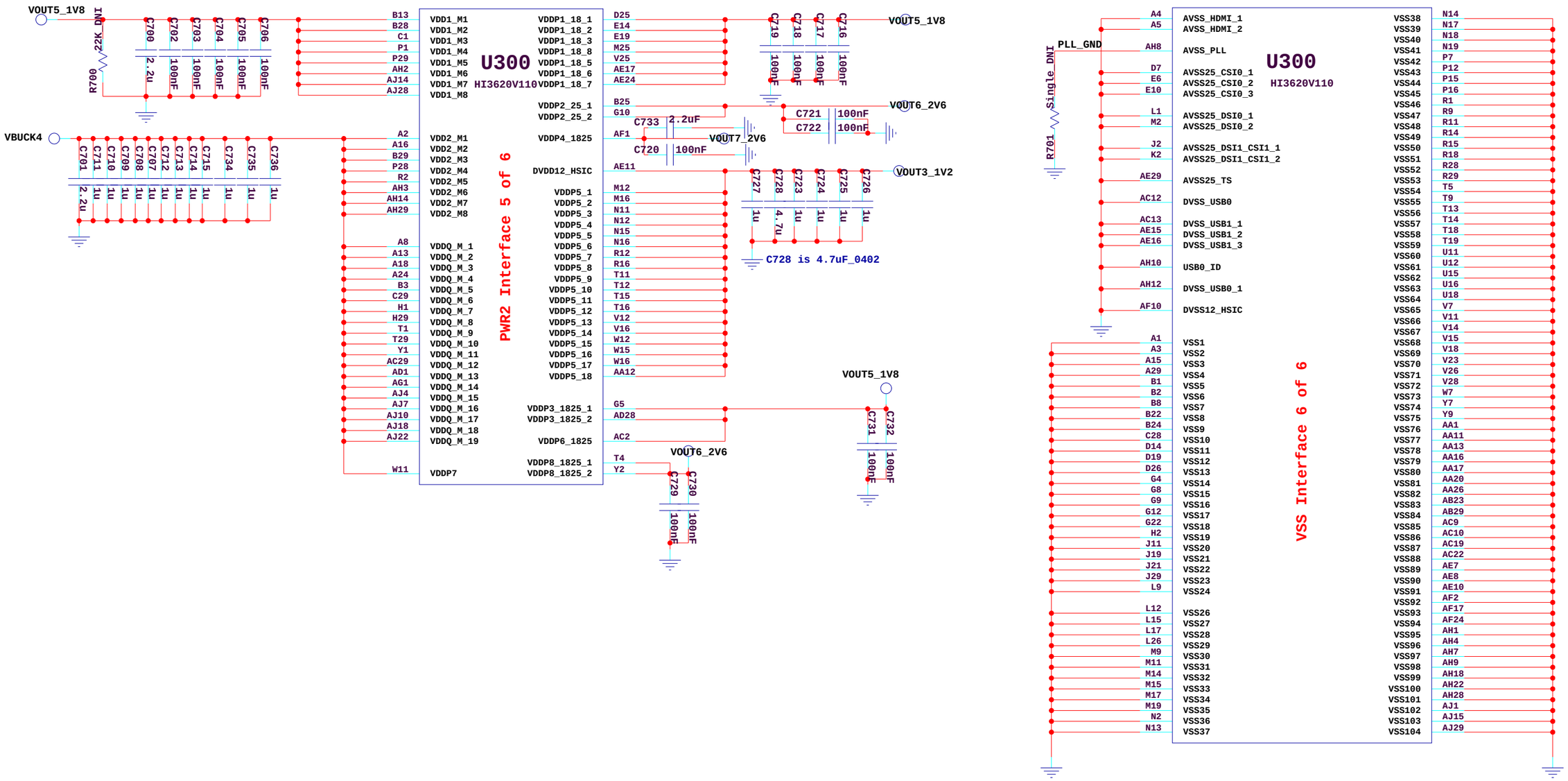

Hi3620v110 power&Decouple2

The type and specification of the components refer to the BOM

				NA	2012.06.05
				ECA NO	DATE
DESIGNED	LIPENG 00203199	HD1U9510MT		6714078_SCH2ZH	
REVIEWED	CHAOKANGJIE 00132205				
		VER	PART_NUMBER	SHEET 7 OF 60	
		A	03021TXV	HUAWEI TECH CO.,LTD.	

NAND Memory Int

The type and specification of the components refer to the BOM

				NA	2012.06.05
				ECA NO	DATE
DESIGNED	LIPENG 00203199	HD1U9510MT		6714078_SCH2ZH	
REVIEWED	CHAOKANGJIE 00132205				
		VER	PART_NUMBER	SHEET 8 OF 60	
		A	03021TXV	HUAWEI TECH CO.,LTD.	

Hi6421 Power Management

Power Management Table

Name	Voltage	Current	Function
VOUT0	2.85V	300mA	MLC NAND/eMMC
VOUT1	1.8V	50mA	26M Oscillator
VOUT2	1.1V	150mA	
VOUT3	1.2V	350mA	SYS.+BT DIG.+PLL DIG.+SOC System DDR PHY + HSIC PHY
VOUT4	2.5V	250mA	MIPI+USB2.0+PCIe+PLL Analog
VOUT5	1.8V	300mA	Hi3620 1.8V I/O(BT&GPS RFIC)
VOUT6	2.6V	300mA	Hi3620 2.6V I/O
VOUT7	2.6V	50mA	Hi3620 SD I/O
VOUT8	3.3V	200mA	USB PHY
VOUT9	2.6V	200mA	Efuse Power
VOUT10	1.8V	150mA	BT RF&PA
VOUT11	2.85V	150mA	GPS RF&PA
VOUT12	2.85V	500mA	SD Card
VOUT13	2.85V	300mA	CMMB
VOUT14	1.8V	150mA	WIFI I/O
VOUT15	3.3V	300mA	WIFI Core&PA
VOUT16	1.8V	150mA	LCD I/O
VOUT17	2.85V	150mA	LCD Analog
VOUT18	1.8V	300mA	Camera I/O
VOUT19	2.85V	300mA	LCD Camera Analog
VOUT20	2.85V	300mA	LCD Camera VCM
VBUCK1	1.1V	4000mA	A9 Core
VBUCK2	1.1V	1400mA	GPU
VBUCK3	1.1V	1100mA	Peripheral
VBUCK4	1.2/1.8V	2000mA	LPDDR2/AP IO
	1.8V	500mA	Low Voltage LDO

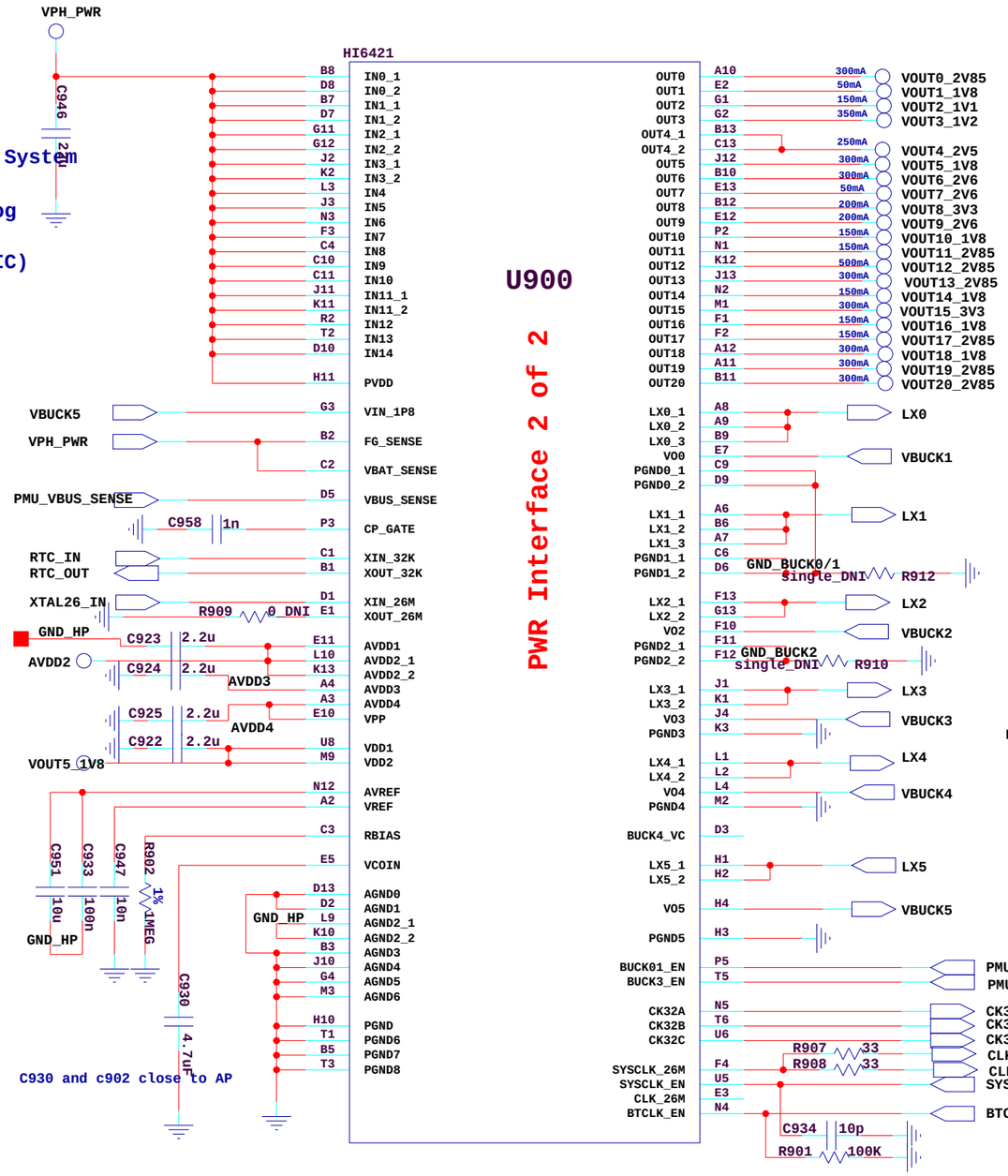

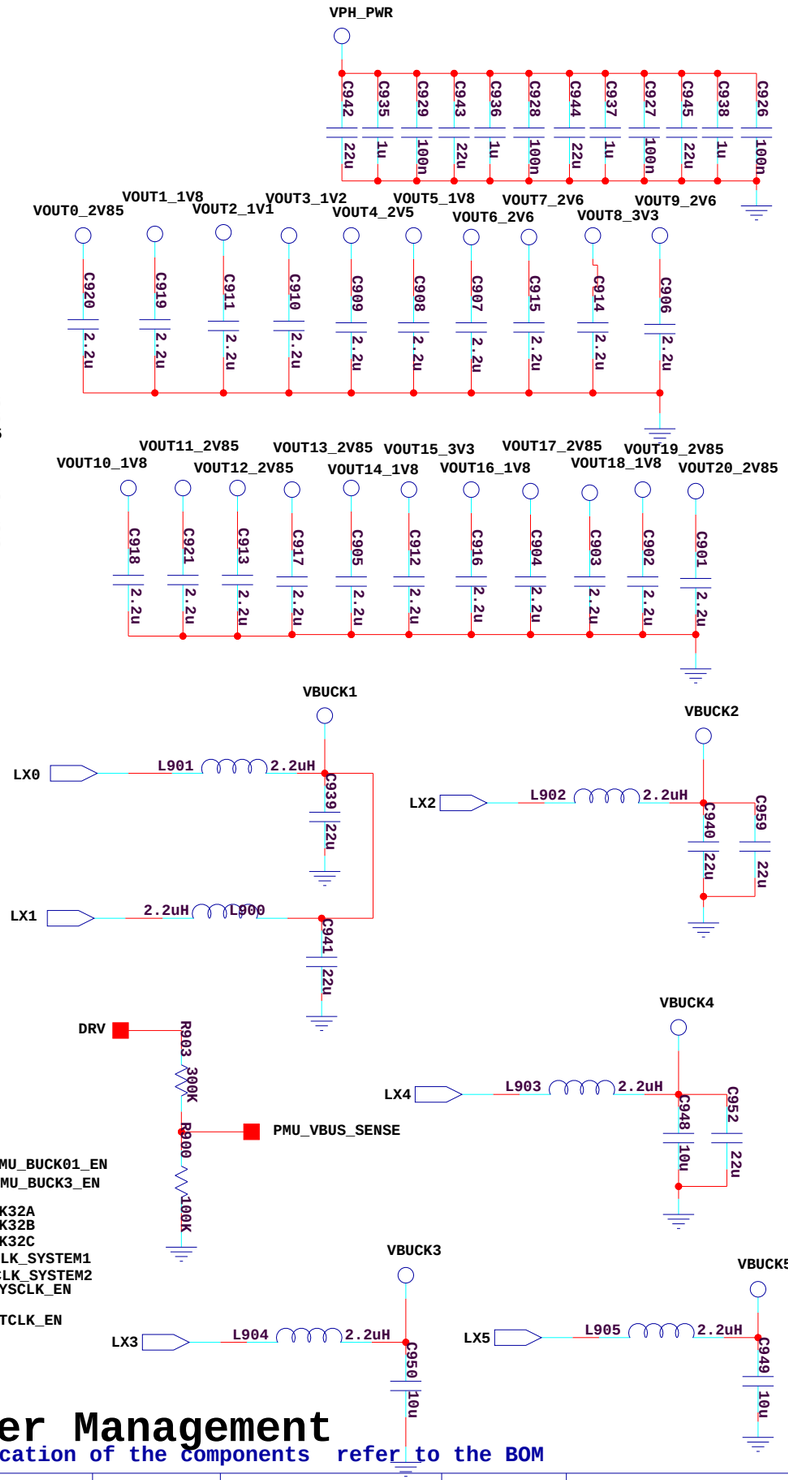

Hi6421 Power Management

The type and specification of the components refer to the BOM

				NA	2012.06.05
				ECA NO	DATE
DESIGNED	LIPENG 00203199	HD1U9510MT		6714078_SCH2ZH	
REVIEWED	CHAOKANGJIE 00132205				
		VER	PART_NUMBER	SHEET 9 OF 60	
		A	03021TXV	HUAWEI TECH CO.,LTD.	

Hi6421 Audio CODEC

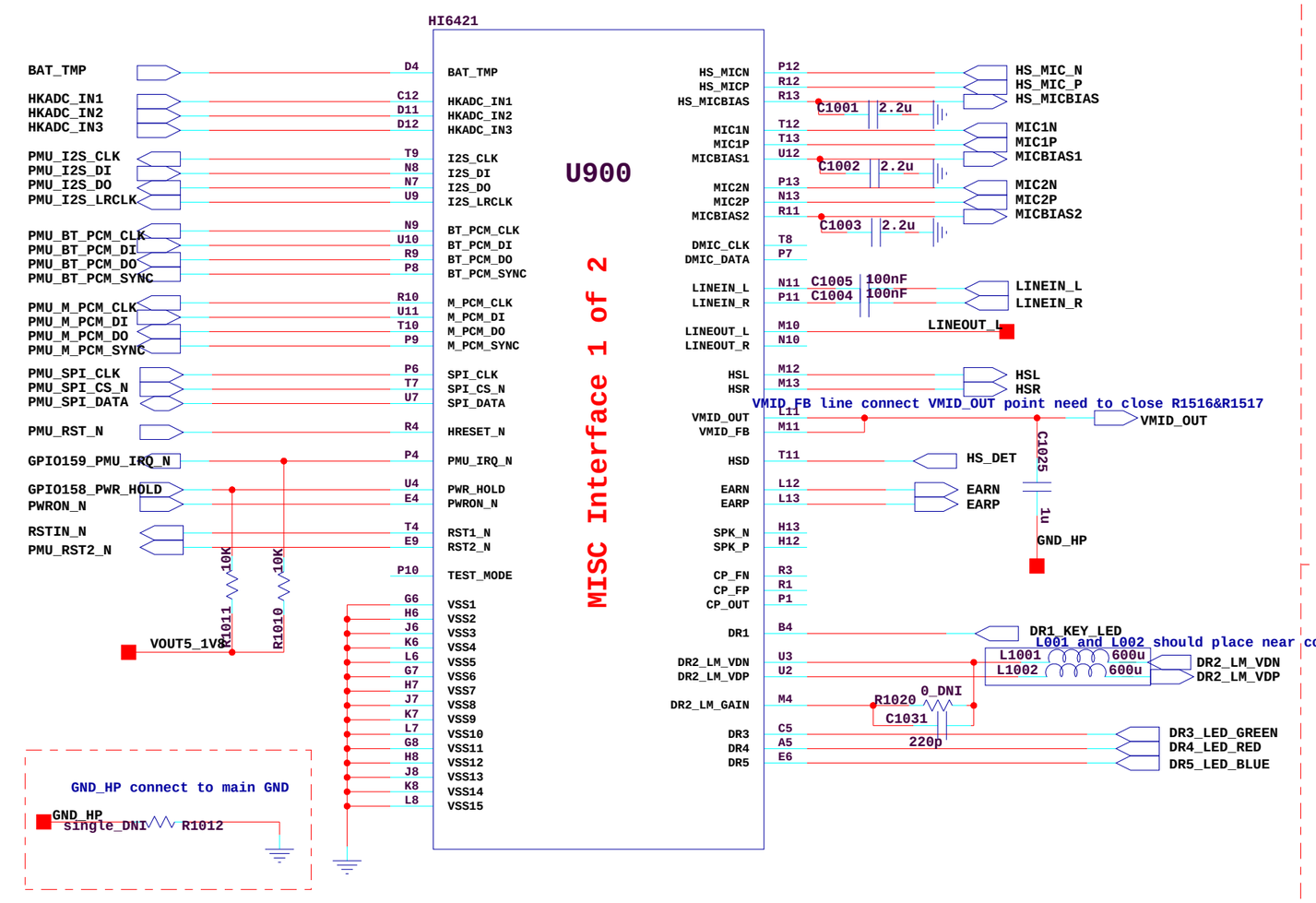

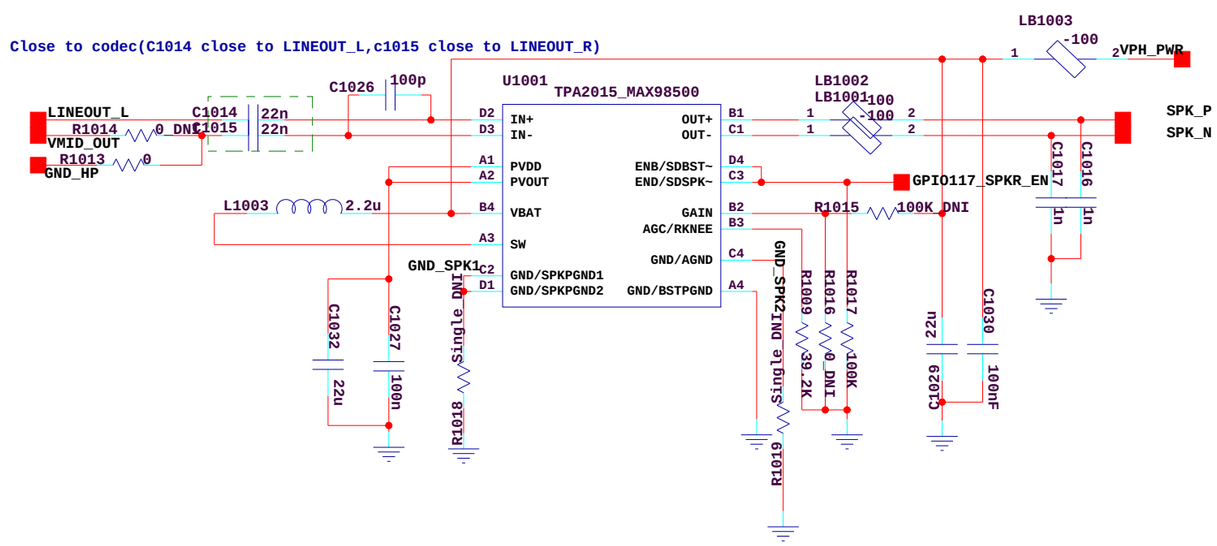

Crystal

32kHz Crystal

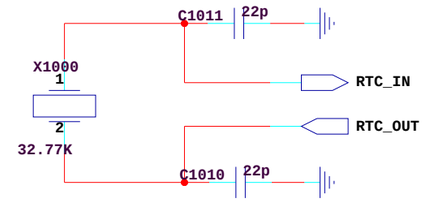

26MHz Crystal

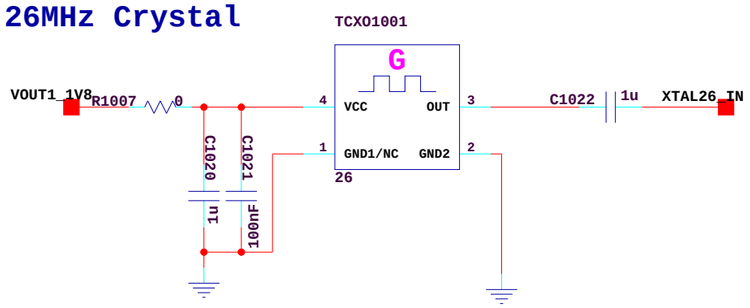

HW Version Detect

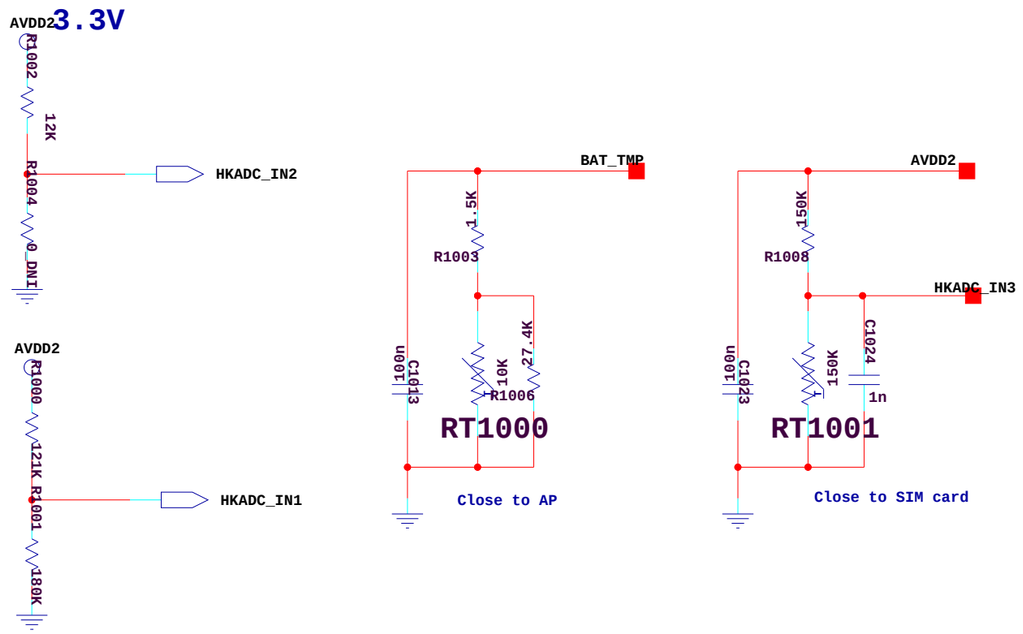

The type and specification of the components refer to the BOM

				NA	2012.06.05
				ECA NO	DATE
DESIGNED	LIPENG 00203199	HD1U9510MT		6714078_SCH2ZH	
REVIEWED	CHAOKANGJIE 00132205				
		VER	PART_NUMBER	SHEET 10 OF 60	
		A	03021TXV	HUAWEI TECH CO.,LTD.	

11. 8GB eMMC AND LPDDR2

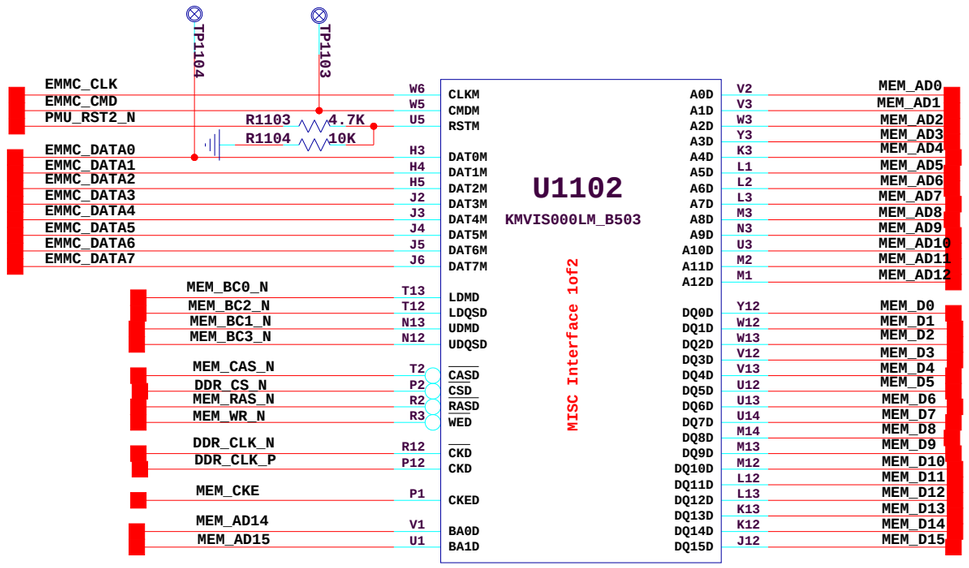

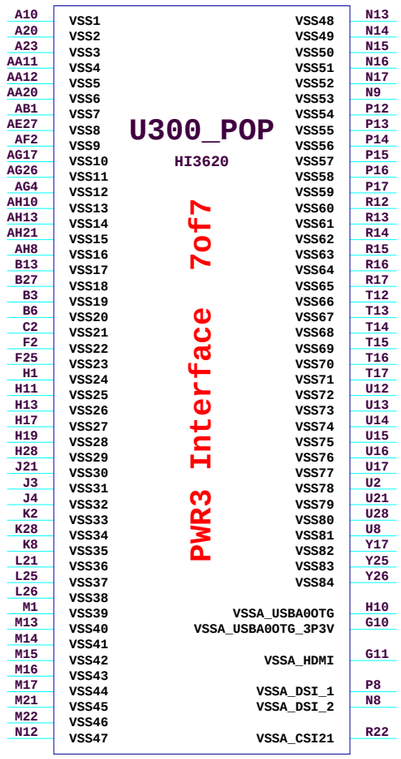

12*16,Need to Cover shield

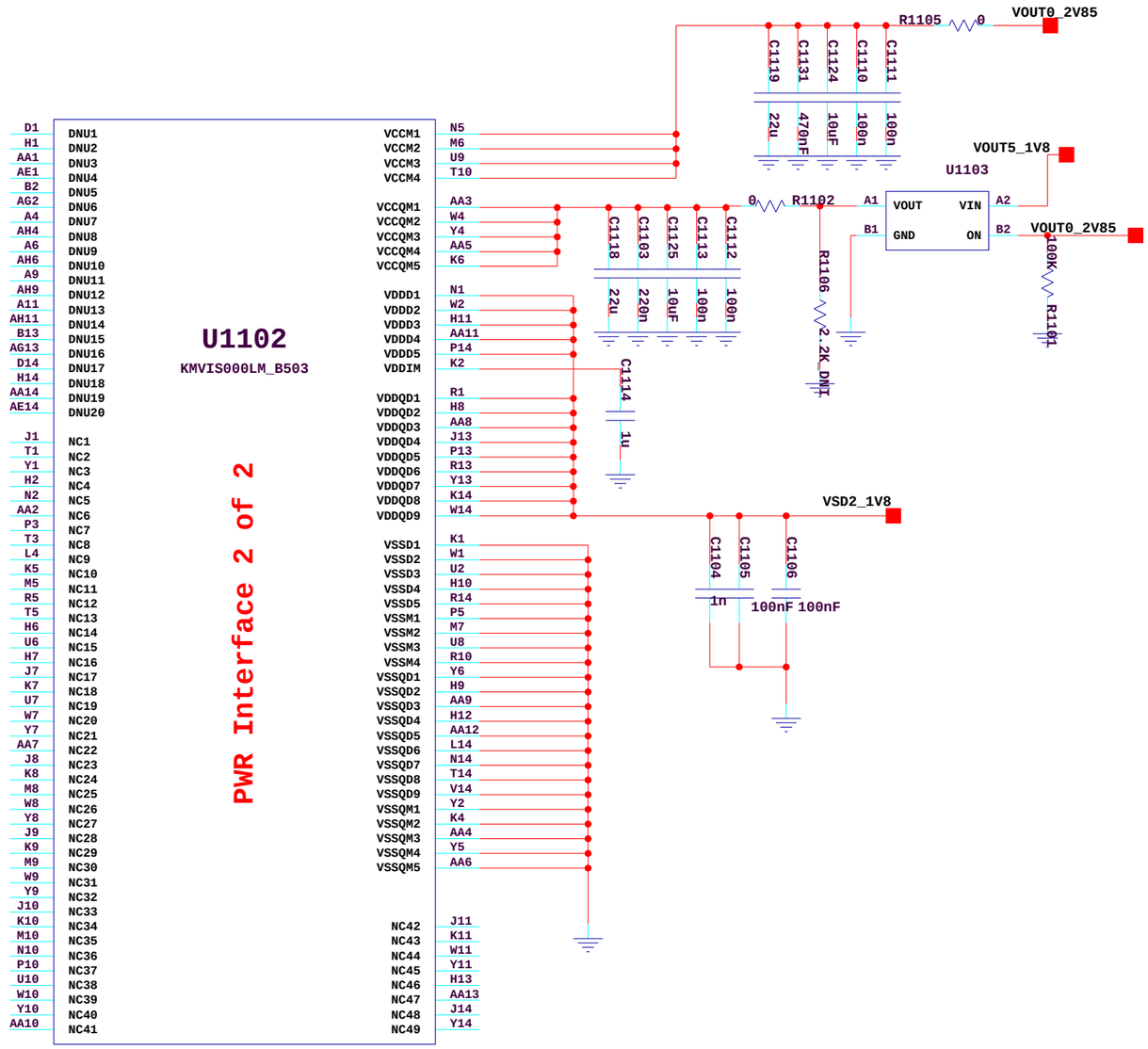

The type and specification of the components refer to the BOM

				NA	2012.06.05
				ECA NO	DATE
DESIGNED	LIPENG 00203199	HD1U9510MT		6714078_SCH2ZH	
REVIEWED	CHAOKANGJIE 00132205				
		VER	PART_NUMBER	SHEET 11 OF 60	
		A	03021TXV	HUAWEI TECH CO.,LTD.	

12.3262

The type and specification of the components refer to the BOM

				NA	2012.06.05
				ECA NO	DATE
DESIGNED	LIPENG 00203199	HD1U9510MT		6714078_SCH2ZH	
REVIEWED	CHAOKANGJIE 00132205				
		VER	PART_NUMBER	SHEET 12 OF 60	
		A	03021TXV	HUAWEI TECH CO.,LTD.	

13. Battery management/Battery

Battery Conector

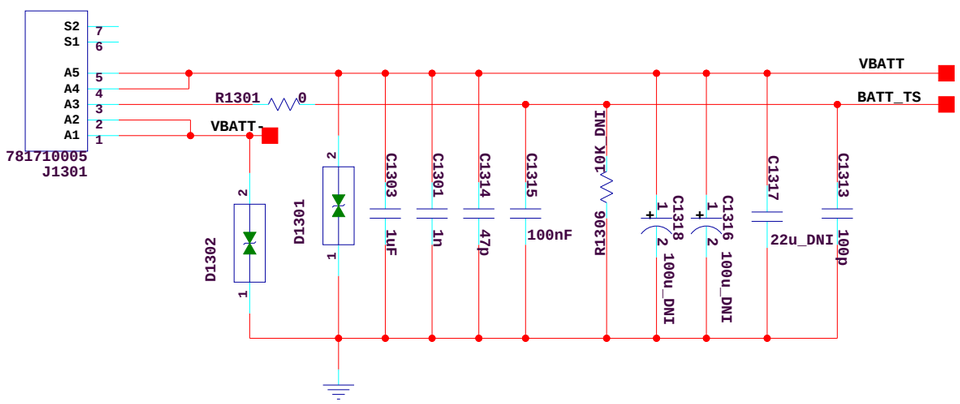

BATTERY MANAGEMENT

CAD note: U1301 close to battery connector

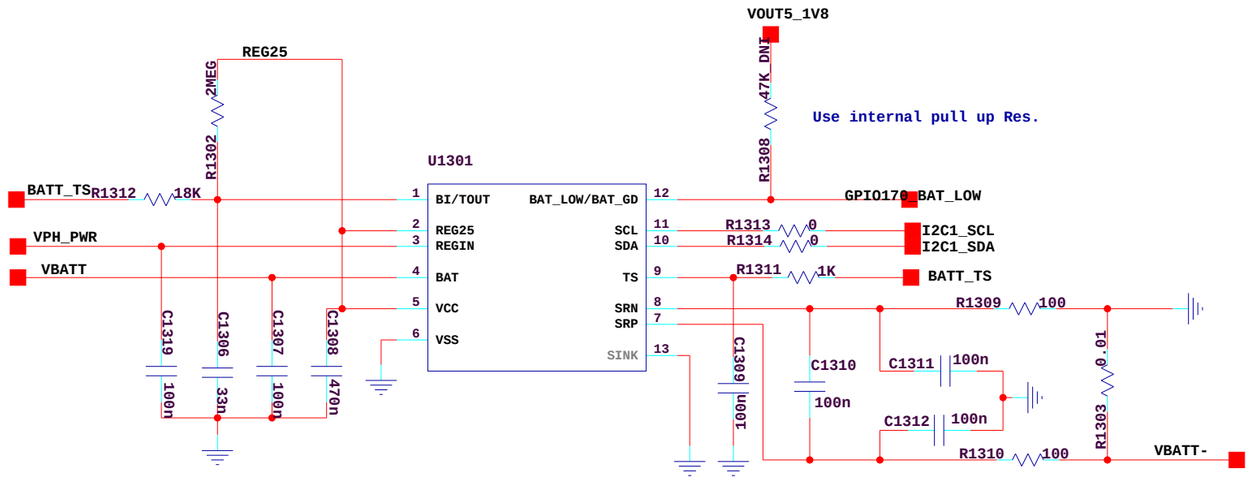

CAD note: differential t

The type and specification of the components refer to the BOM

				NA	2012.06.05
				ECA NO	DATE
DESIGNED	LIPENG 00203199	HD1U9510MT		6714078_SCH2ZH	
REVIEWED	CHAOKANGJIE 00132205				
		VER	PART_NUMBER	SHEET 13 OF 60	
		A	03021TXV	HUAWEI TECH CO.,LTD.	

14. MIC

Primarily Handset Mic

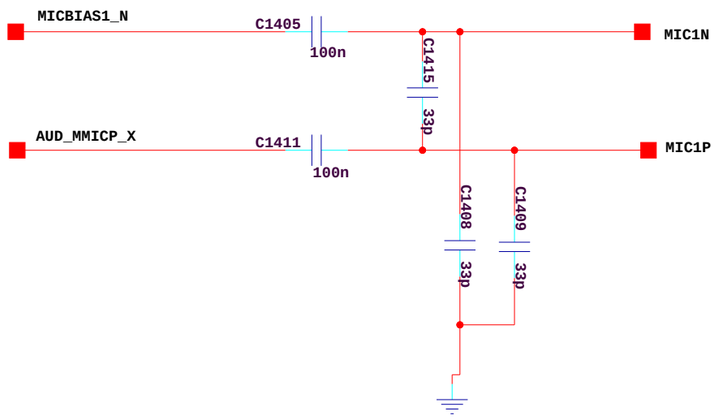

Second Handset Mic For Noise Cancellati

MIC2N and MIC2P should refer to same GND in one layer

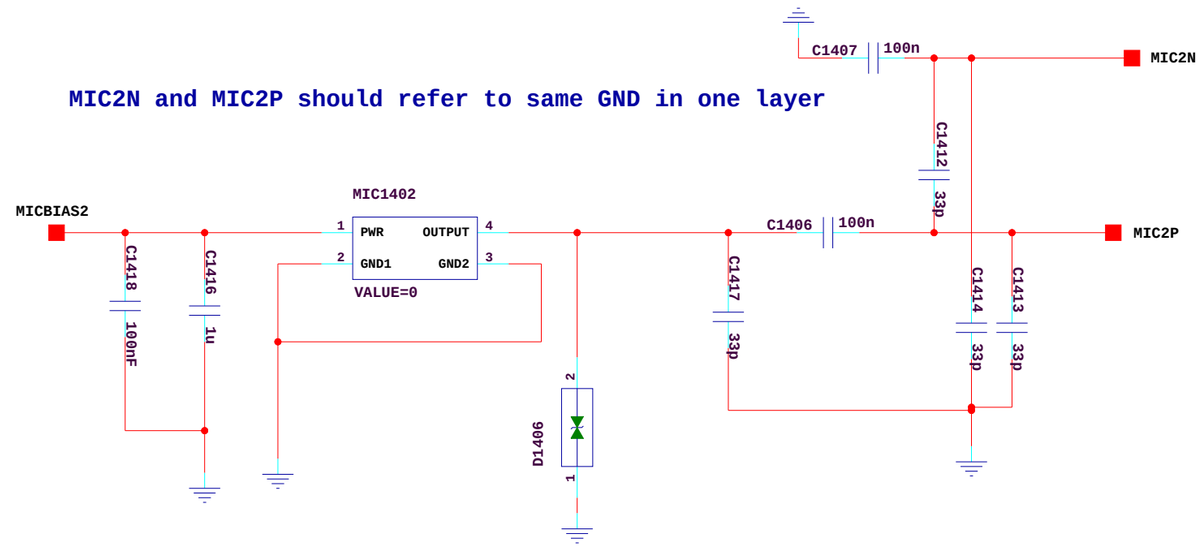

The type and specification of the components refer to the BOM

				NA	2012.06.05
				ECA NO	DATE
DESIGNED	LIPENG 00203199	HD1U9510MT		6714078_SCH2ZH	
REVIEWED	CHAOKANGJIE 00132205				
		VER	PART_NUMBER	SHEET 14 OF 60	
		A	03021TXV	HUAWEI TECH CO.,LTD.	

15. 3.5 Headphone

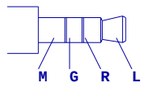

HTC headset (default)

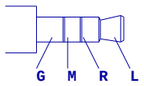

HUAWEI headset

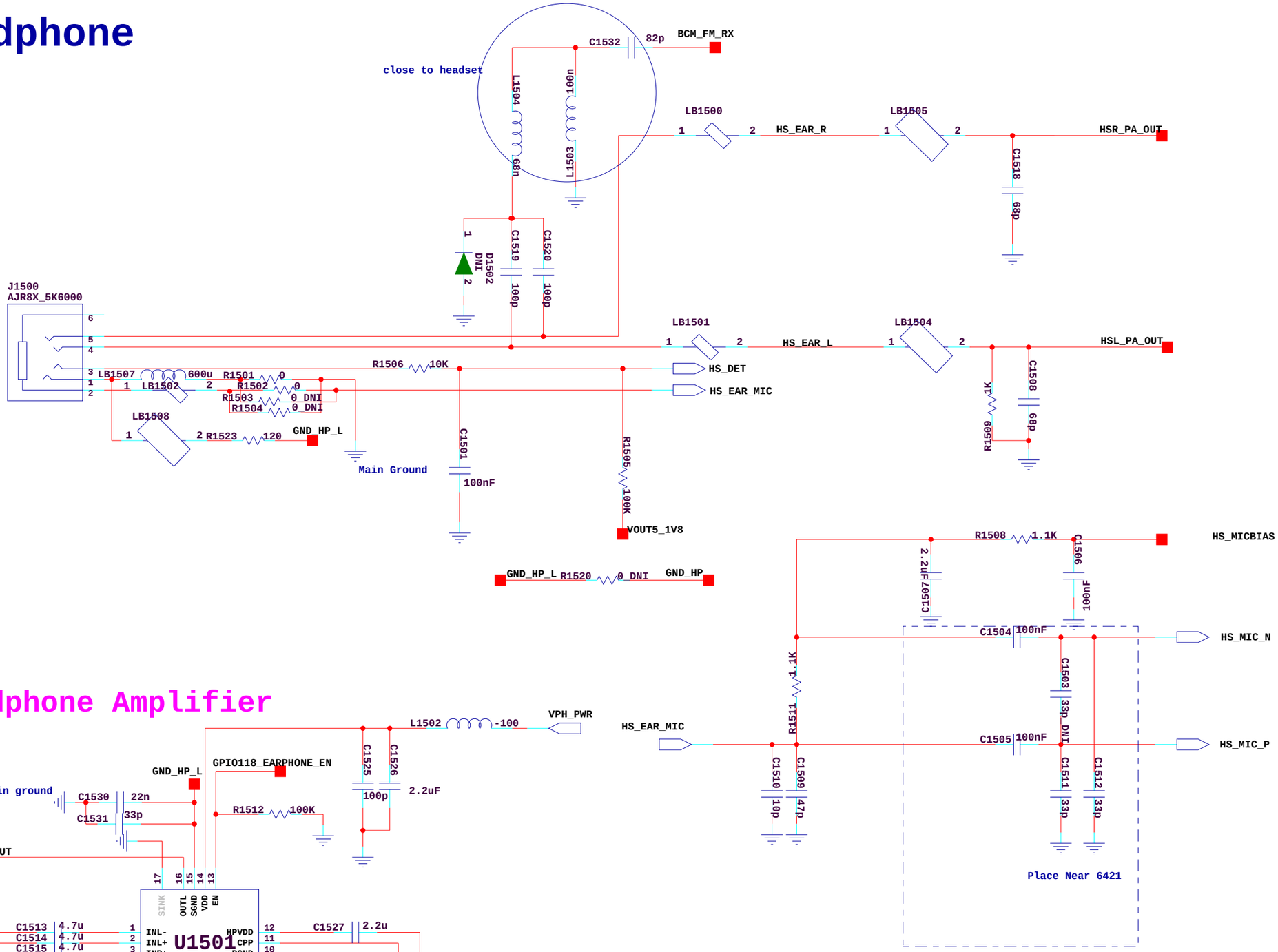

Stereo Headphone Amplifier

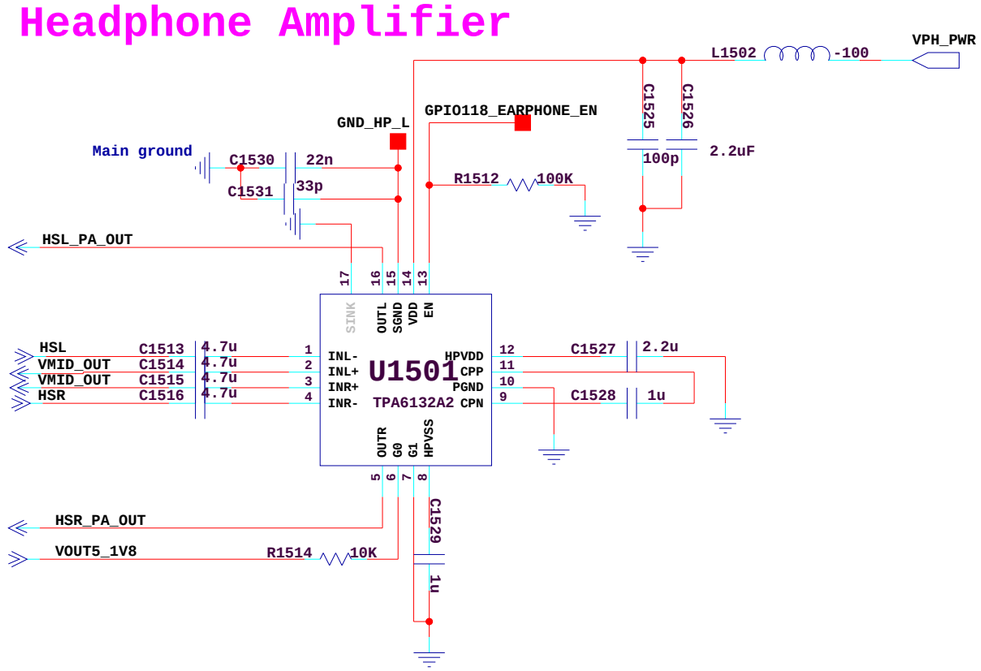

The type and specification of the components refer to the BOM

Headphone				NA	2012.06.05
				ECA NO	DATE
DESIGNED	LIPENG 00203199	HD1U9510MT		6714078_SCH2ZH	
REVIEWED	CHAOKANGJIE 00132205				
		VER	PART_NUMBER	SHEET 15 OF 60	
		A	03021TXV	HUAWEI TECH CO.,LTD.	

16. LCD interface

4.5' LCD POS/NEG Voltage Driver

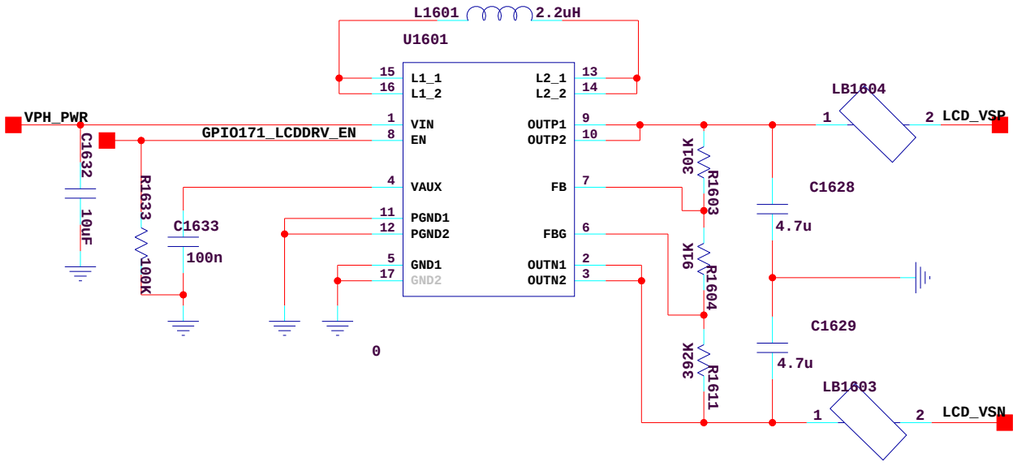

4.5' LCD BL DRIVER

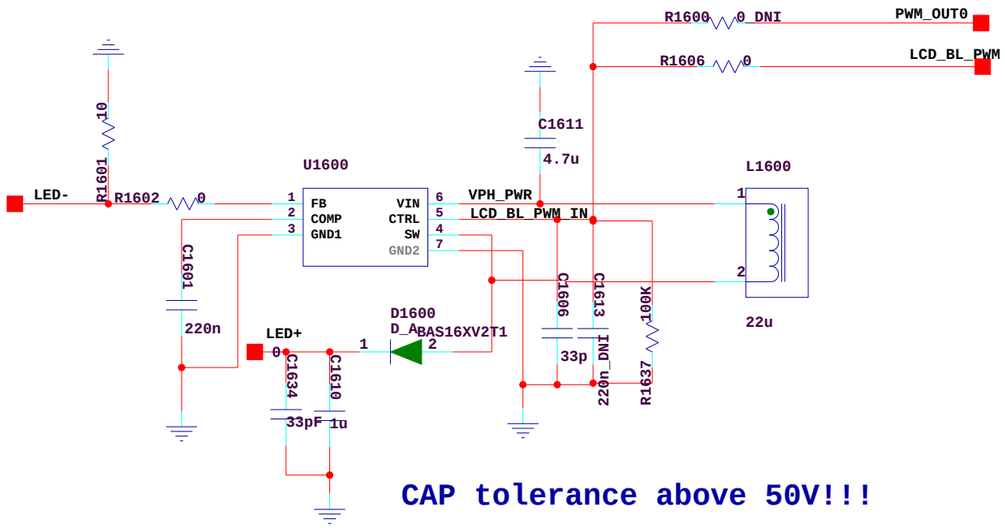

CAP tolerance above 50V!!!

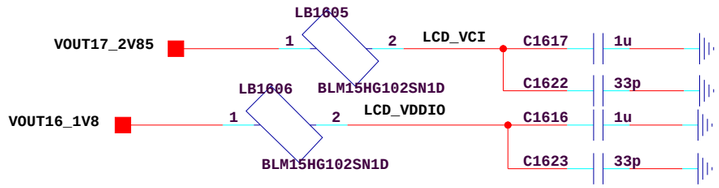

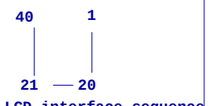

4.5' Toshiba TFT LCD

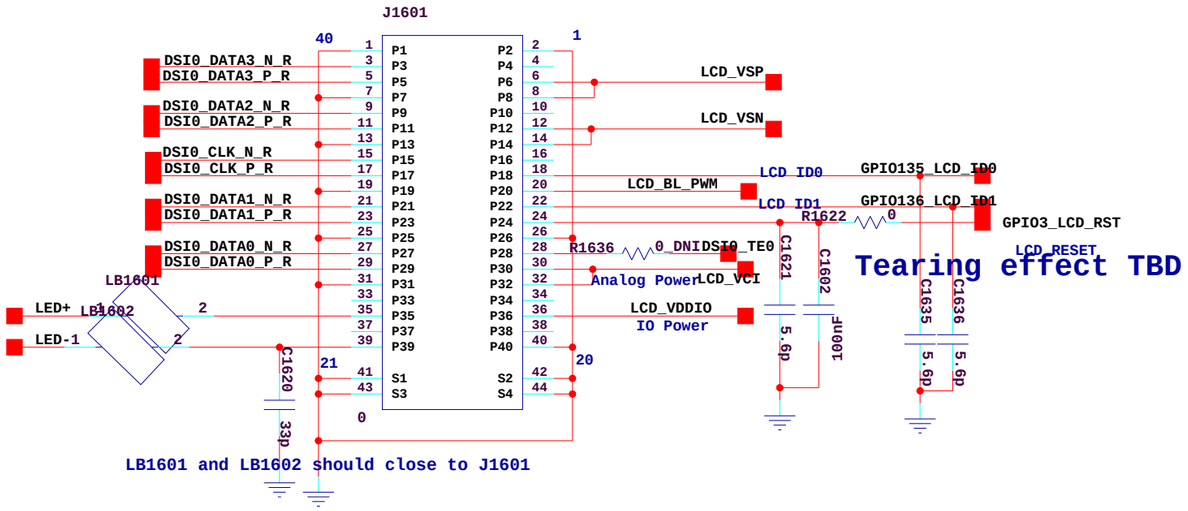

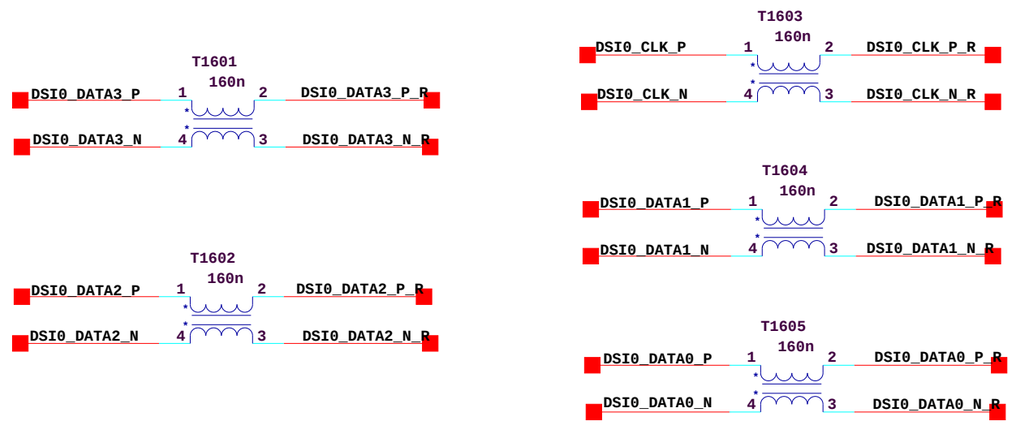

The type and specification of the components refer to the BOM

				NA	2012.06.05
				ECA NO	DATE
DESIGNED	LIPENG 00203199	HD1U9510MT		6714078_SCH2ZH	
REVIEWED	CHAOKANGJIE 00132205				
		VER	PART_NUMBER	SHEET 16 OF 60	
		A	03021TXV	HUAWEI TECH CO.,LTD.	

17.ISP Module Circuits

The type and specification of the components refer to the BOM

				NA	2012.06.05
				ECA NO	DATE
DESIGNED	LIPENG 00203199	HD1U9510MT		6714078_SCH2ZH	
REVIEWED	CHAOKANGJIE 00132205			17	
		VER	PART_NUMBER	SHEET 17 OF 60	
		A	03021TXV	HUAWEI TECH CO.,LTD.	

18. Main Camera and Slave Camera

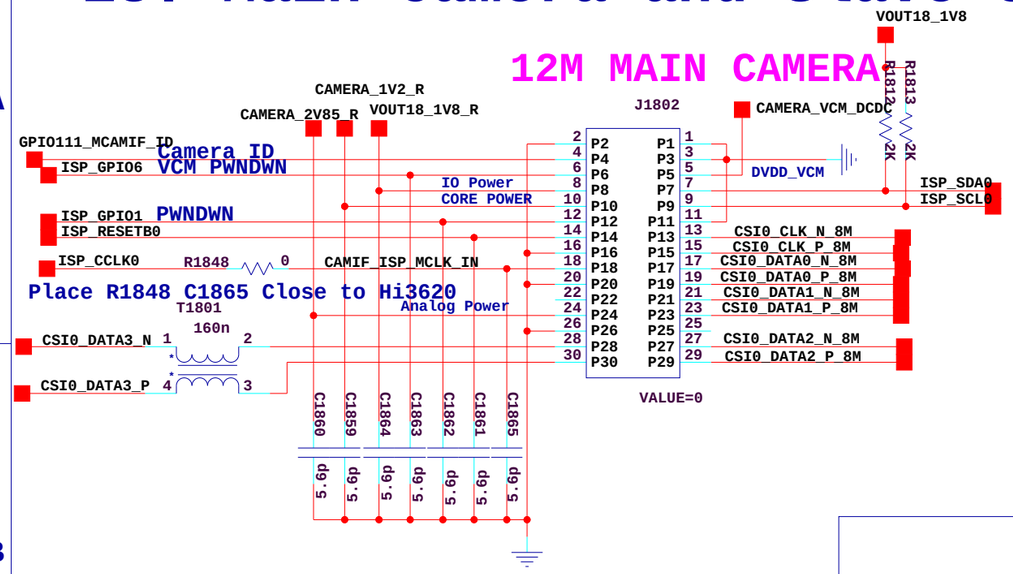

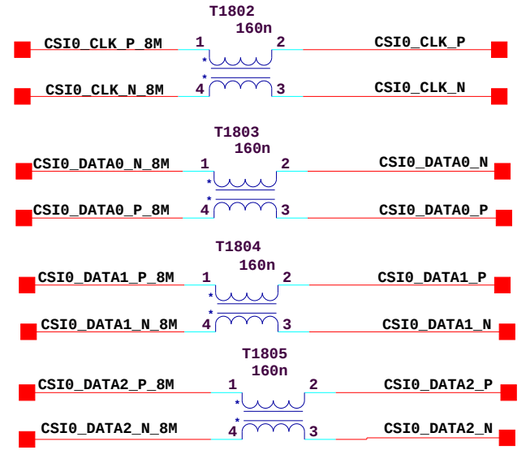

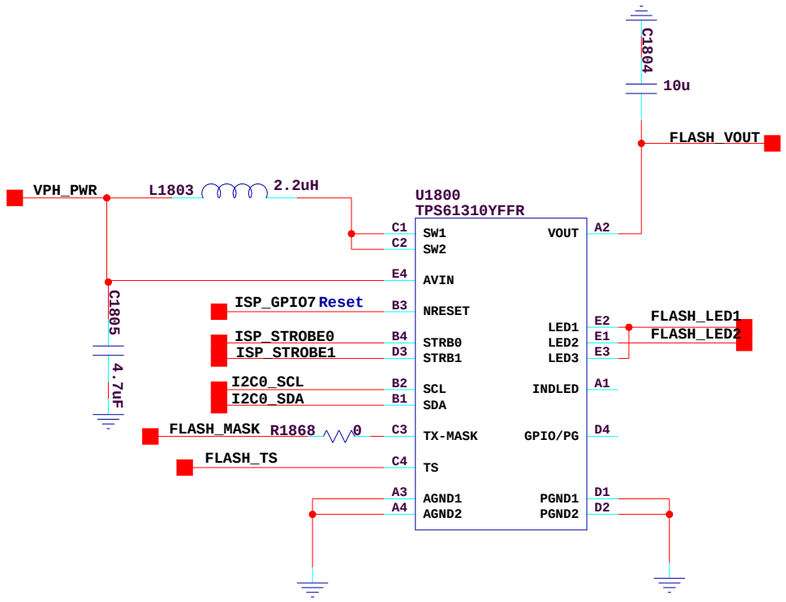

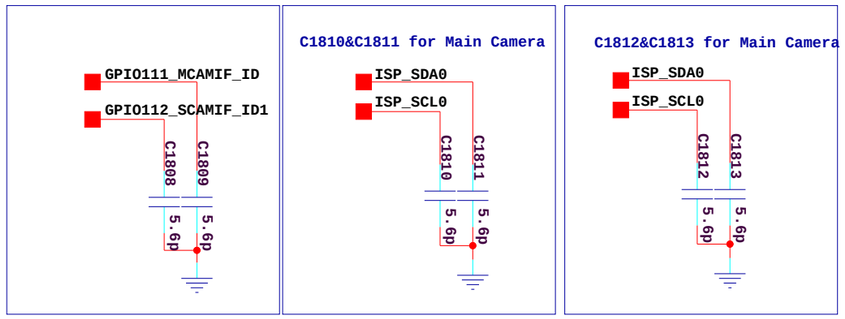

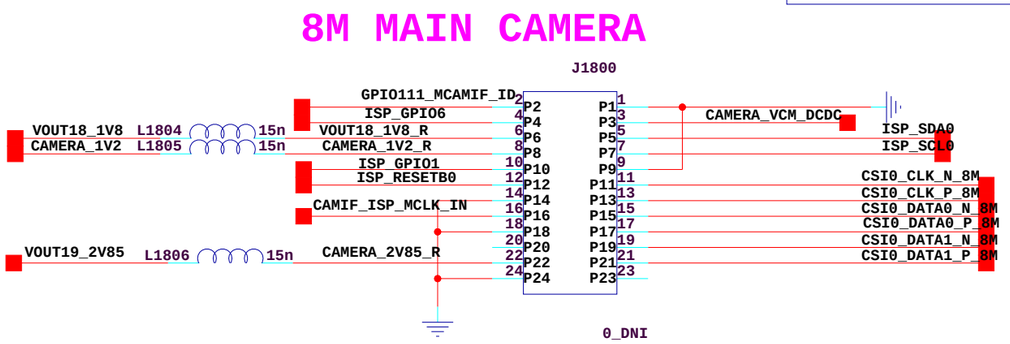

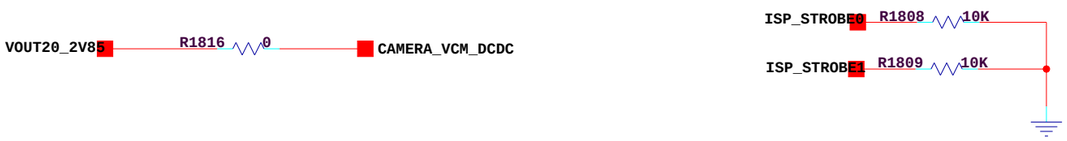

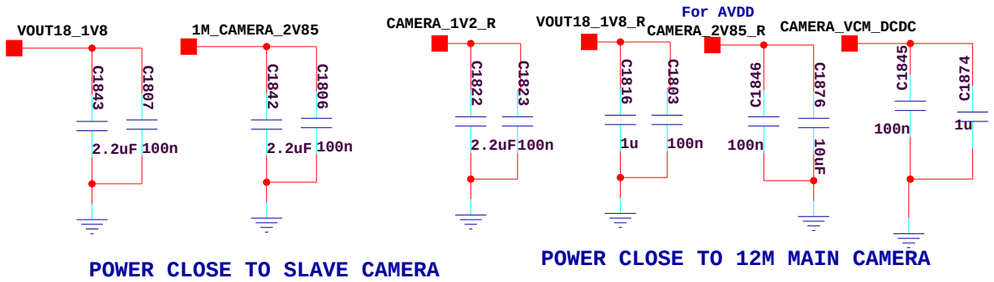

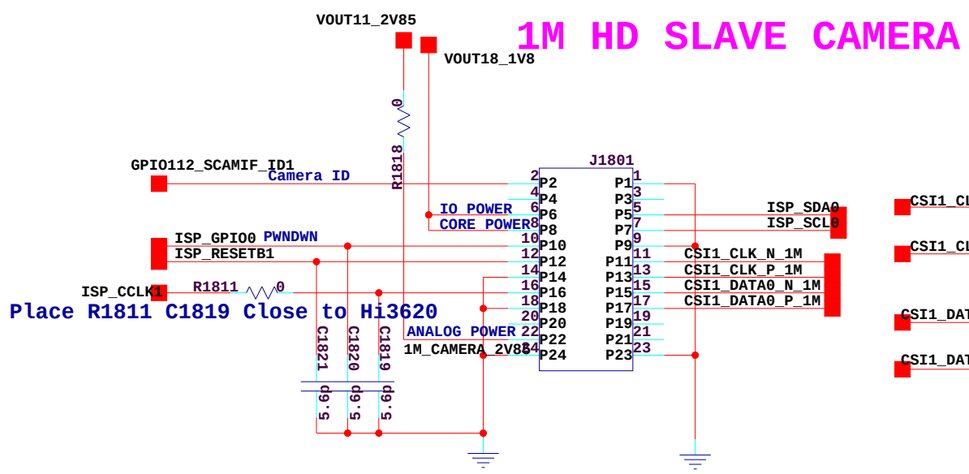

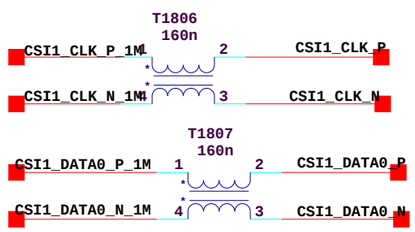

The type and specification of the components refer to the BOM

				NA	2012.06.05
				ECA NO	DATE
DESIGNED	LIPENG 00203199	HD1U9510MT		6714078_SCH2ZH	
REVIEWED	CHAOKANGJIE 00132205				
		VER	PART_NUMBER	SHEET 18 OF 60	
		A	03021TXV	HUAWEI TECH CO.,LTD.	

19. USB/Charge management

Micro USB Connector

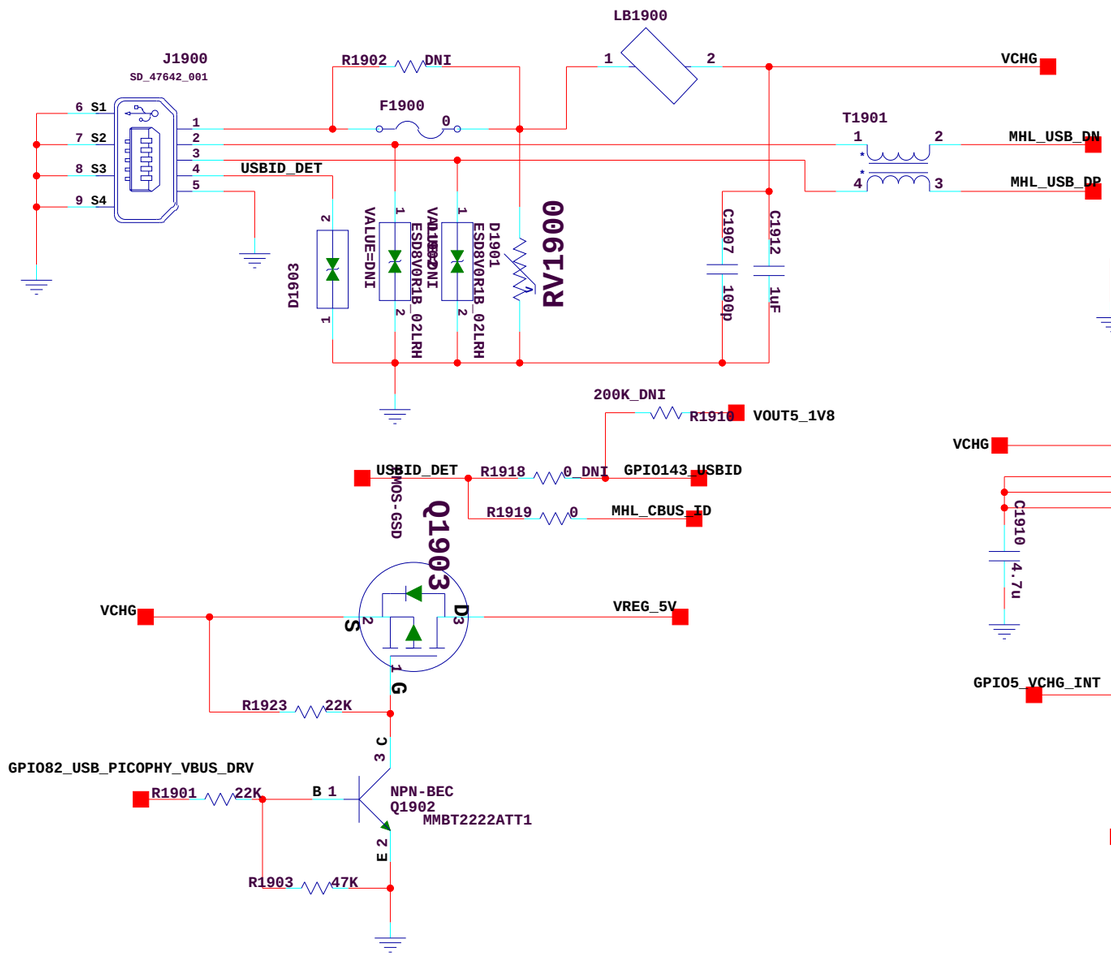

MHL/USB/AUDIO USB SWITCH

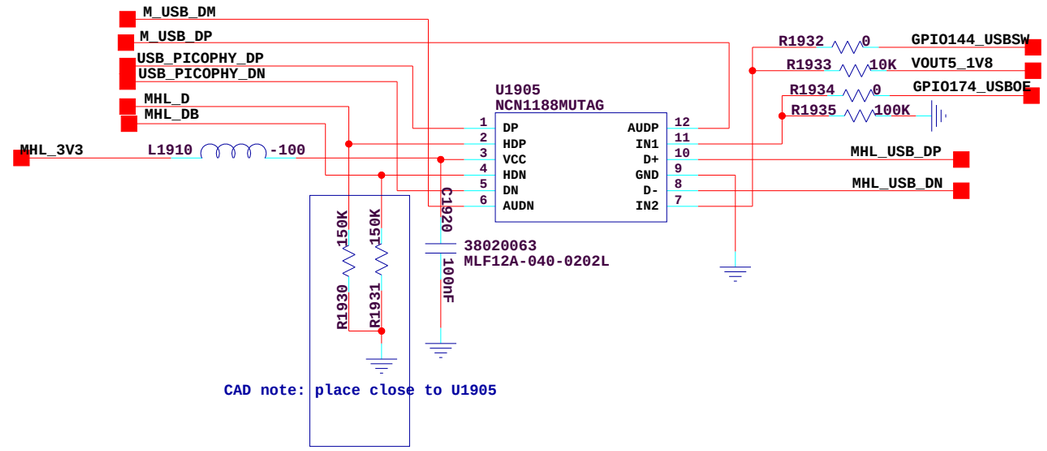

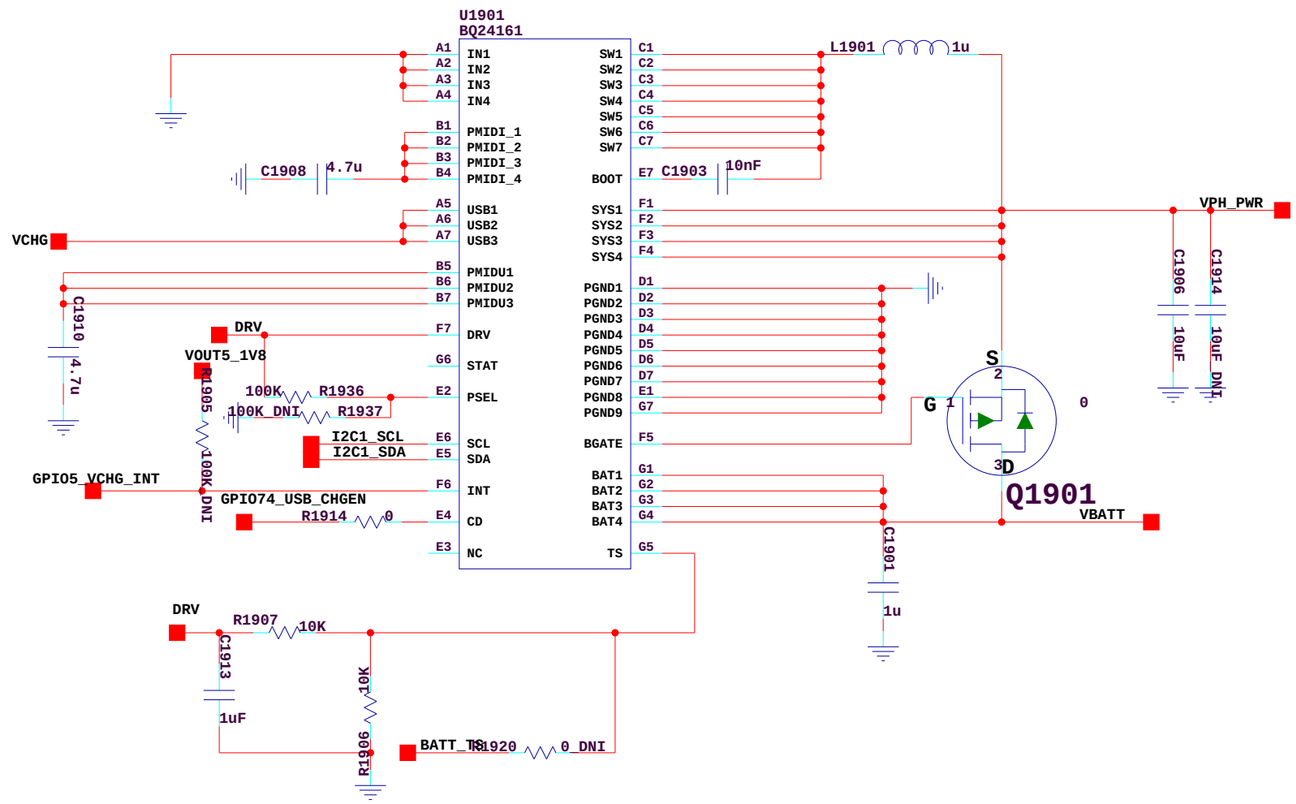

The type and specification of the components refer to the BOM

				NA	2012.06.05
				ECA NO	DATE
DESIGNED	LIPENG 00203199	HD1U9510MT		6714078_SCH2ZH	
REVIEWED	CHAOKANGJIE 00132205				
		VER	PART_NUMBER	SHEET 19 OF 60	
		A	03021TXV	HUAWEI TECH CO.,LTD.	

20. Sensor/Status indicator

Accelerometer

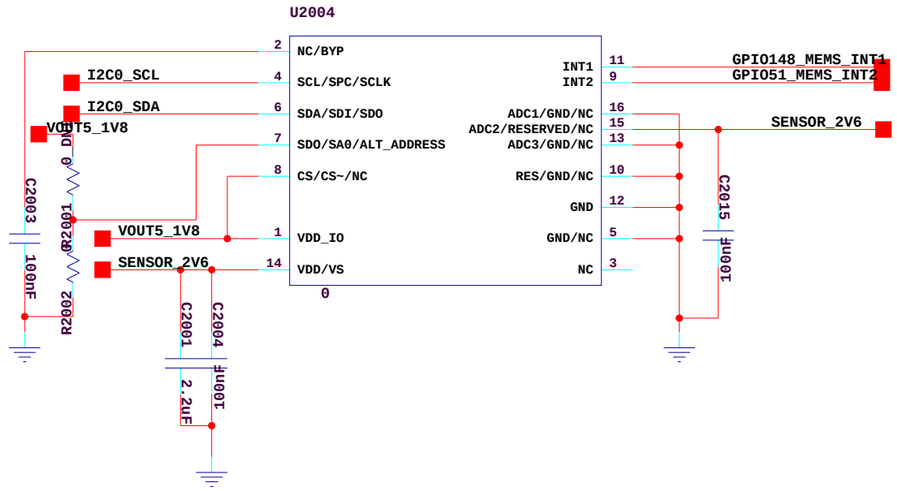

Gyroscope

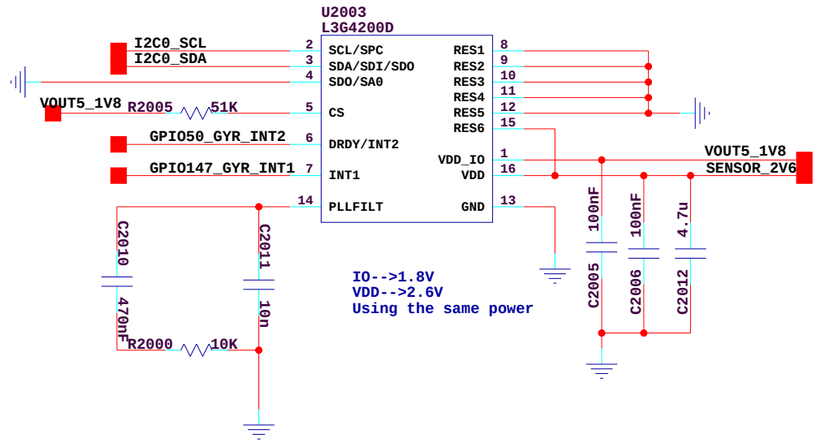

Compass

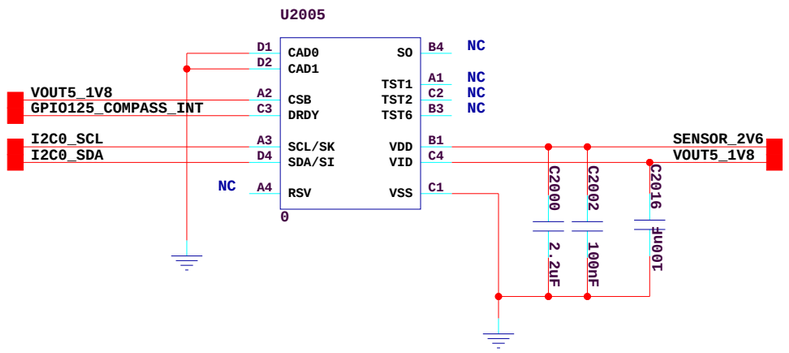

The type and specification of the components refer to the BOM

				NA	2012.06.05
				ECA NO	DATE
DESIGNED	LIPENG 00203199	HD1U9510MT		6714078_SCH2ZH	
REVIEWED	CHAOKANGJIE 00132205				
		VER	PART_NUMBER	SHEET 20 OF 60	
		A	03021TXV	HUAWEI TECH CO.,LTD.	

21. SIM/TF card

SIM Card

J2102's specically for single SIM card project usage

J2103's specically for dual SIM card project usage

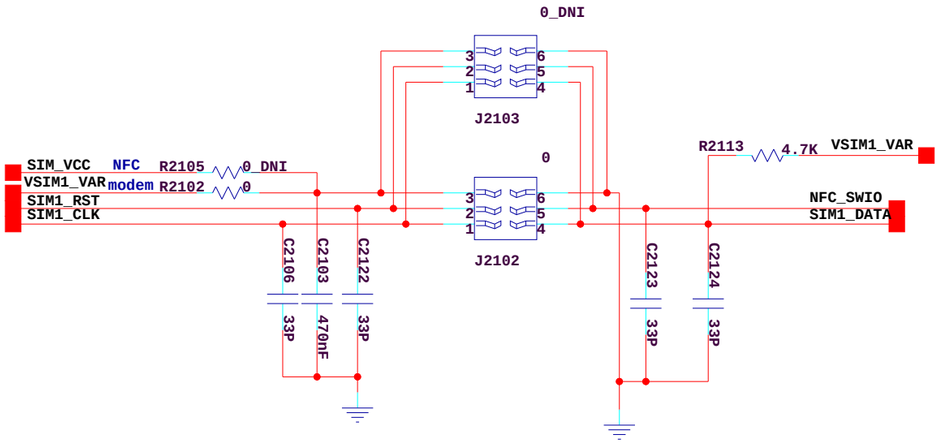

SIM Card ESD Protect

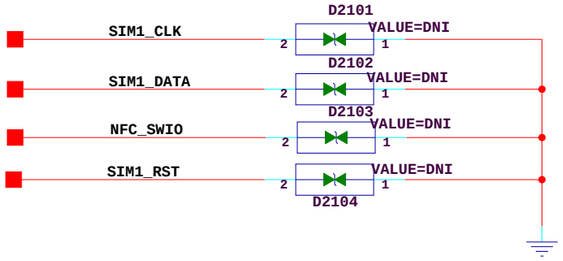

Micro SD Card

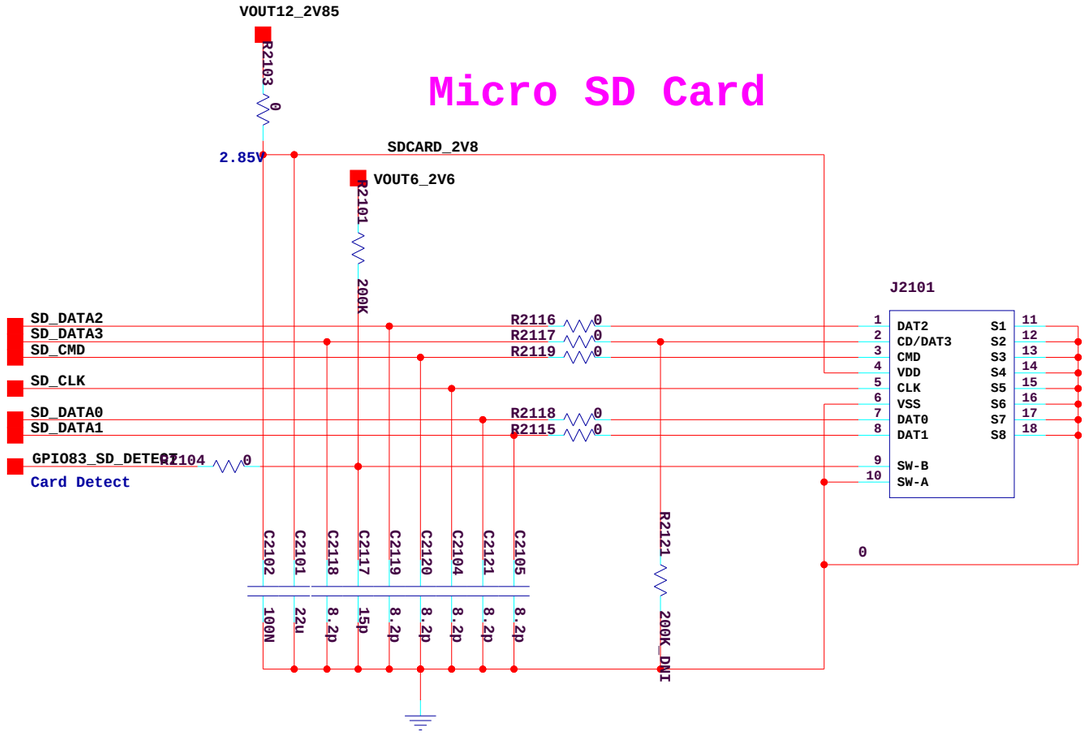

The type and specification of the components refer to the BOM

				NA	2012.06.05
				ECA NO	DATE
DESIGNED	LIPENG 00203199	HD1U9510MT		6714078_SCH2ZH	
REVIEWED	CHAOKANGJIE 00132205				
		VER	PART_NUMBER	SHEET 21 OF 60	
		A	03021TXV	HUAWEI TECH CO.,LTD.	

22. FPC interface

Up FPC interface

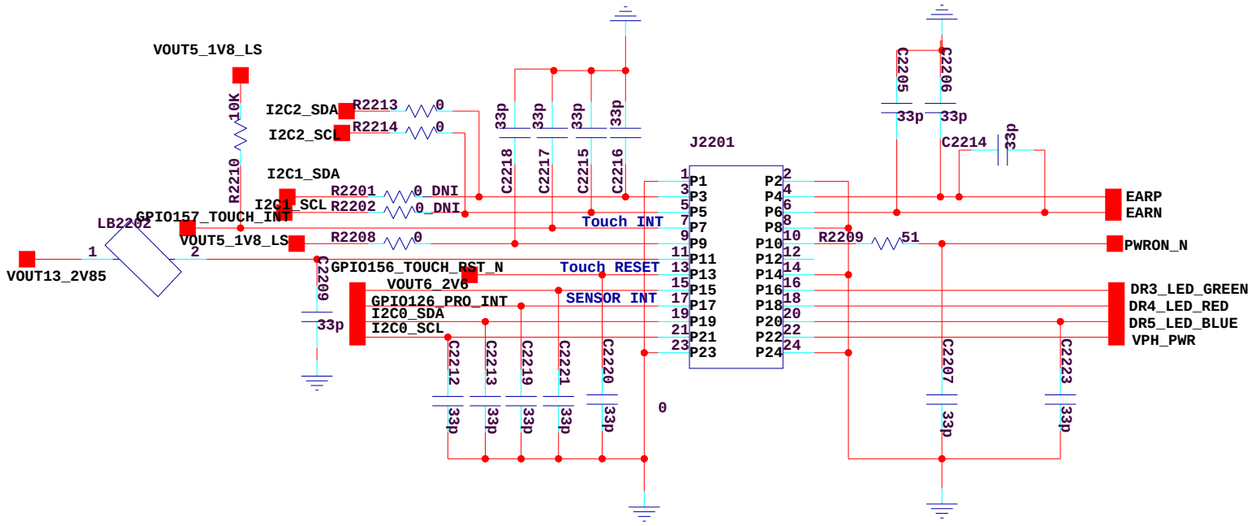

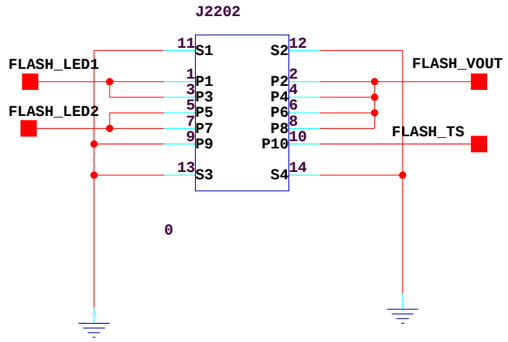

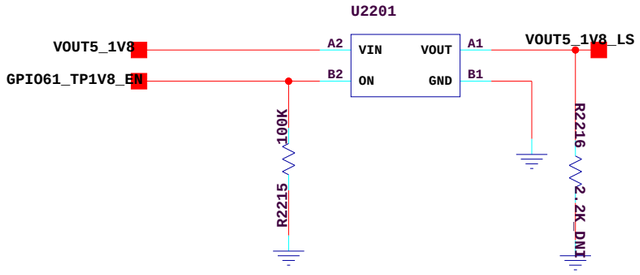

Down FPC interface

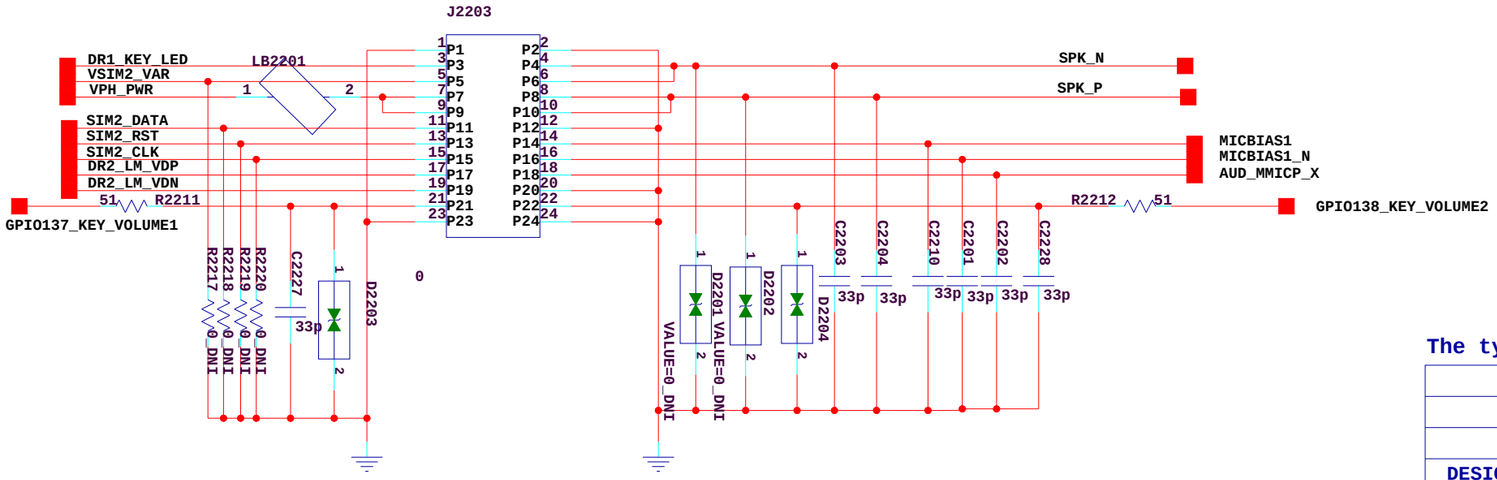

The type and specification of the components refer to the BOM

				NA	2012.06.05
				ECA NO	DATE
DESIGNED	LIPENG 00203199	HD1U9510MT		6714078_SCH2ZH	
REVIEWED	CHAOKANGJIE 00132205				
		VER	PART_NUMBER	SHEET 22 OF 60	
		A	03021TXV	HUAWEI TECH CO.,LTD.	

23. HDMI Connector

The type and specification of the components refer to the BOM

				NA	2012.06.05
				ECA NO	DATE
DESIGNED	LIPENG 00203199	HD1U9510MT		6714078_SCH2ZH	
REVIEWED	CHAOKANGJIE 00132205				
		VER	PART_NUMBER	SHEET 23 OF 60	
		A	03021TXV	HUAWEI TECH CO.,LTD.	

24. Test Points/JTAG/Shields

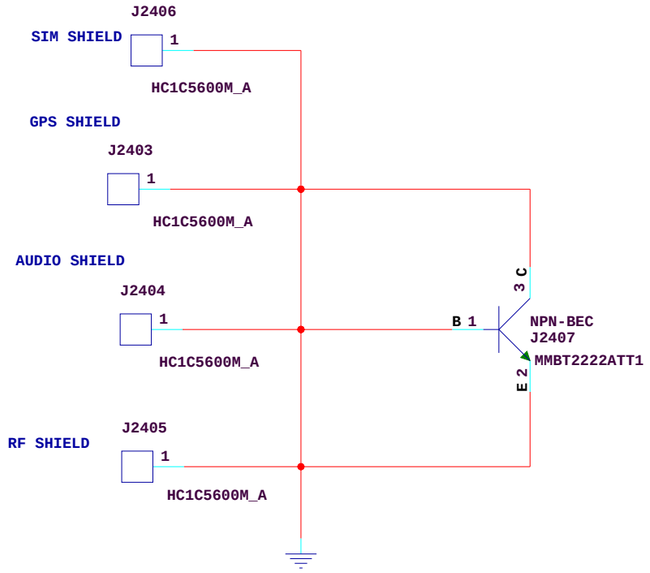

TEST POINT for CT and BT

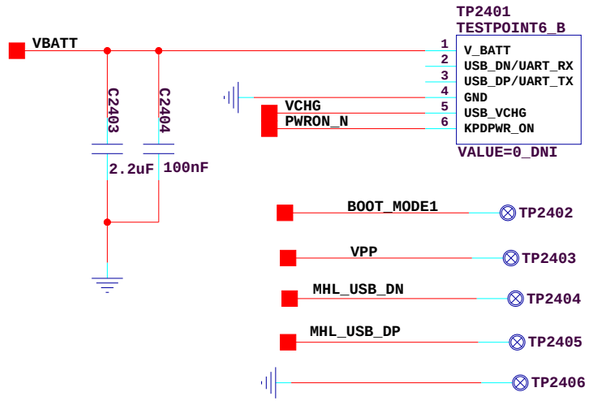

AP JTAG

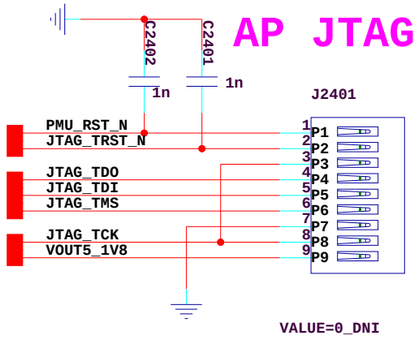

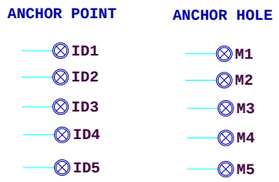

MODEM JTAG

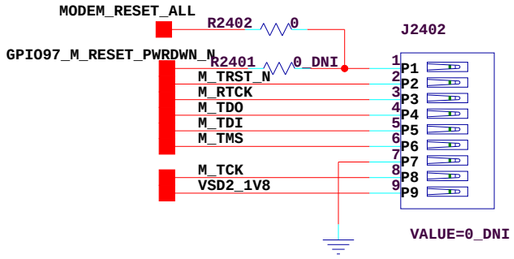

The type and specification of the components refer to the BOM

				NA	2012.06.05
				ECA NO	DATE
DESIGNED	LIPENG 00203199	HD1U9510MT		6714078_SCH2ZH	
REVIEWED	CHAOKANGJIE 00132205				
		VER	PART_NUMBER	SHEET 24 OF 60	
		A	03021TXV	HUAWEI TECH CO.,LTD.	

25.X-GOLD626 PMU

Power Net	Voltage
VSD1_VAR	0.9V...1.2V (20mV steps)
VSD2_1V8	1.8V
VUSB_PD_1V1	1.1V
VUSB_ANA_1V8	1.8V
VUSB_IO_VAR	2.5V / 2.85V / 3.1V
VRTC_1V8	1.8V
VPMU_1V3	1.1V/1.3V
VPLL_1V2	1.2V
VIO_1V2	1.2V
VSIM_VAR	1.8V / 2.9V

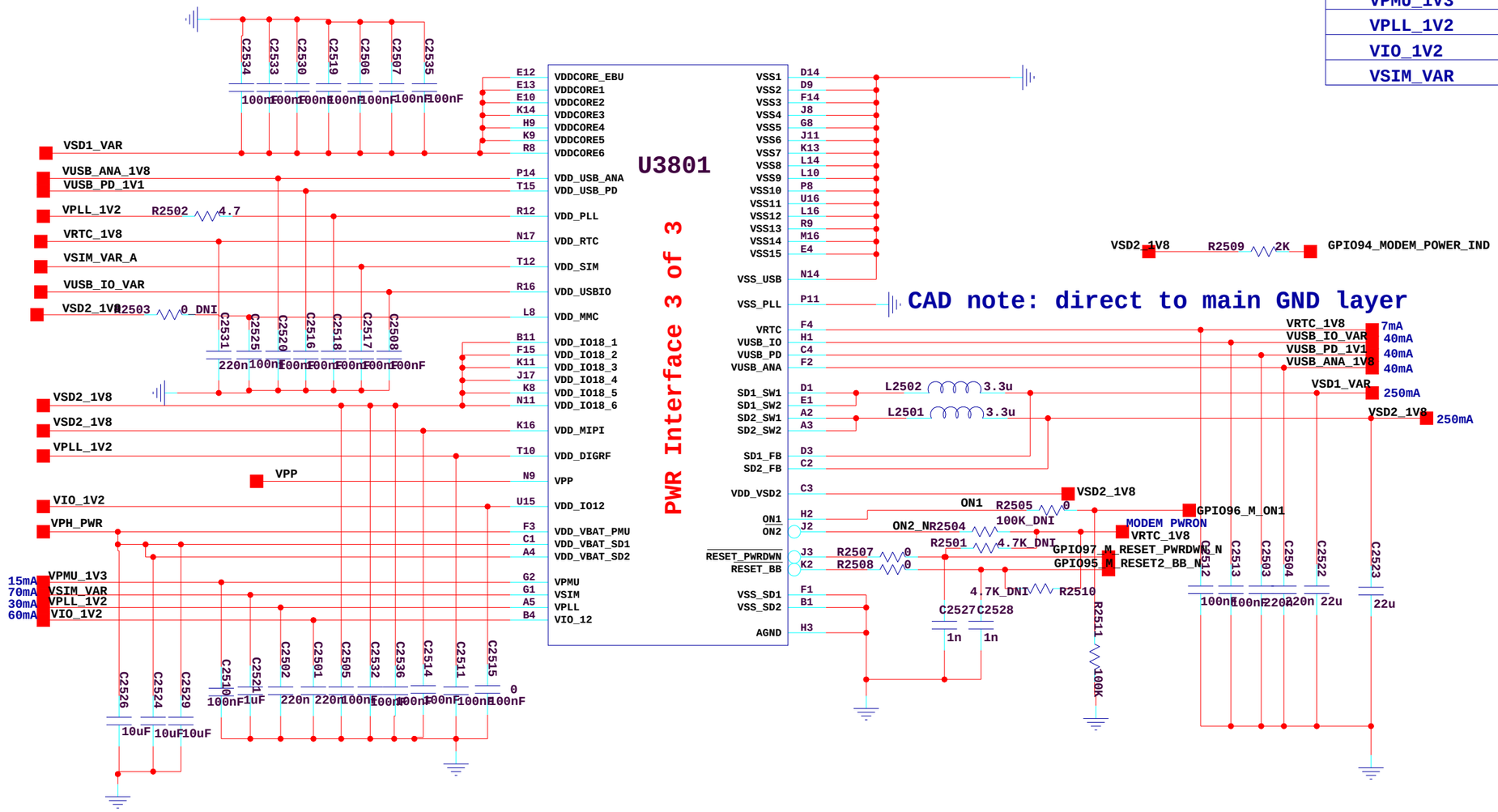

The type and specification of the components refer to the BOM

				NA	2012.06.05
				ECA NO	DATE
DESIGNED	LIPENG 00203199	HD1U9510MT		6714078_SCH2ZH	
REVIEWED	CHAOKANGJIE 00132205				
		VER	PART_NUMBER	SHEET 25 OF 60	
		A	03021TXV	HUAWEI TECH CO.,LTD.	

VSNS_1V2 40/100mA
VSNS_1V8 90/170mA
VSNS_2V85 80/160mA
VSNS_2V85:Max 160mA,type 80mA

26.X-GOLD626 Memory Interface

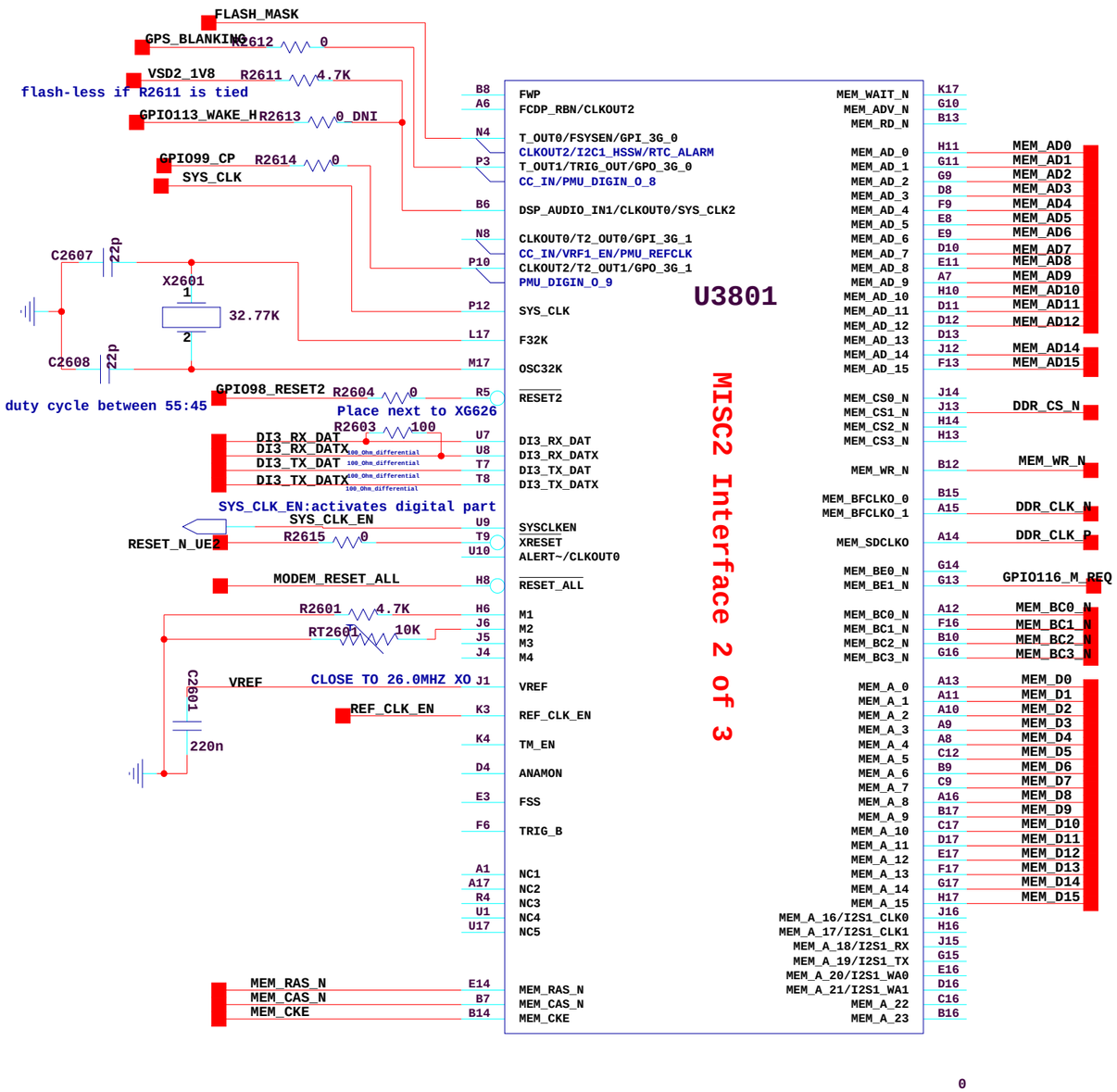

0

Boot Config	DSP_AUDIO_IN1 HWCFG[3]	MON1 HWCFG[2]	MON2 HWCFG[1]	TRIG_IN HWCFG[0]	Boot Config Description
1	0	0	0	1	16-bit AD muxed NOR Flash
2	0	0	1	0	16-bit AAD muxed NOR Flash
5	0	1	0	1	8-bit NAND Flash
6	0	1	1	0	16-bit NAND Flash
9	1	0	0	1	eMMC - connected to MMCI1
11	1	0	1	1	16-bit muxed (DDR) SDRAM shared2
12	1	1	0	0	16-bit muxed (DDR) SDRAM shared1
14	1	1	1	0	Flashless boot

The type and specification of the components refer to the BOM

				NA	2012.06.05
				ECA NO	DATE
DESIGNED	LIPENG 00203199	HD1U9510MT		6714078_SCH2ZH	
REVIEWED	CHAOKANGJIE 00132205				
		VER	PART_NUMBER	SHEET 26 OF 60	
		A	03021TXV	HUAWEI TECH CO.,LTD.	

27.X-GOLD626 Other Interface and GPIO

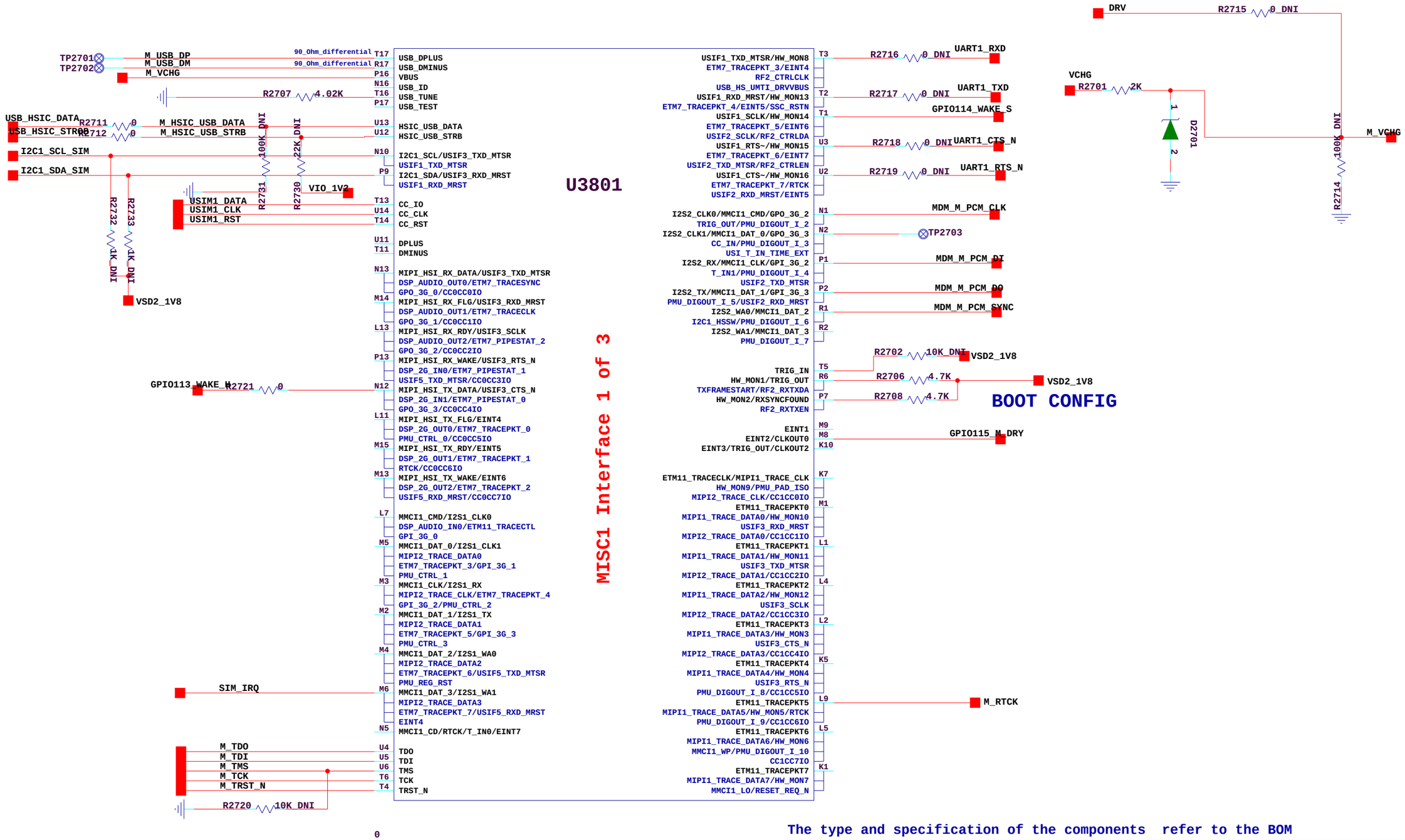

The type and specification of the components refer to the BOM

				NA	2012.06.05
				ECA NO	DATE
DESIGNED	LIPENG 00203199	HD1U9510MT		6714078_SCH2ZH	
REVIEWED	CHAOKANGJIE 00132205				
		VER	PART_NUMBER	SHEET 27 OF 60	
		A	03021TXV	HUAWEI TECH CO.,LTD.	

28.Audience ES305

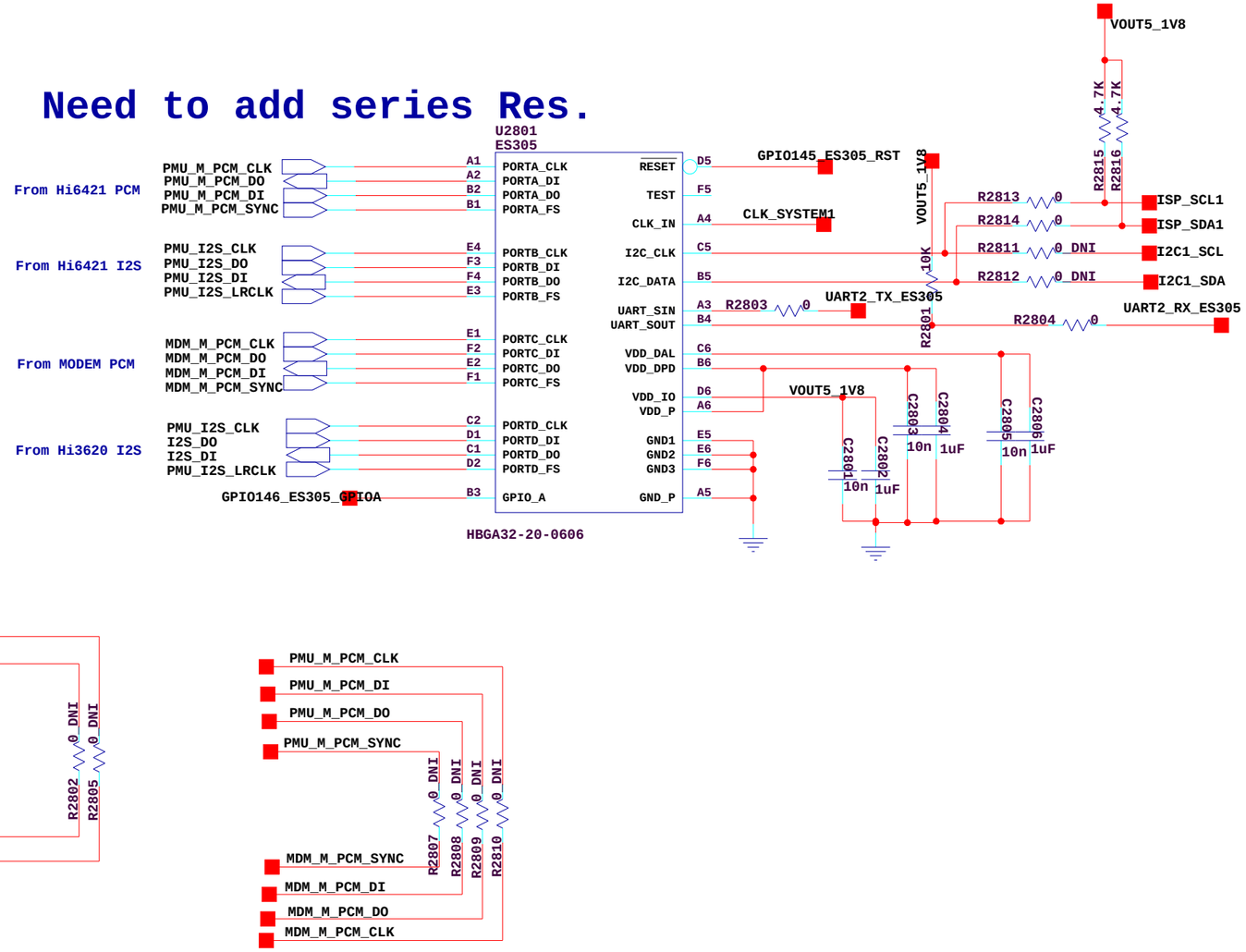

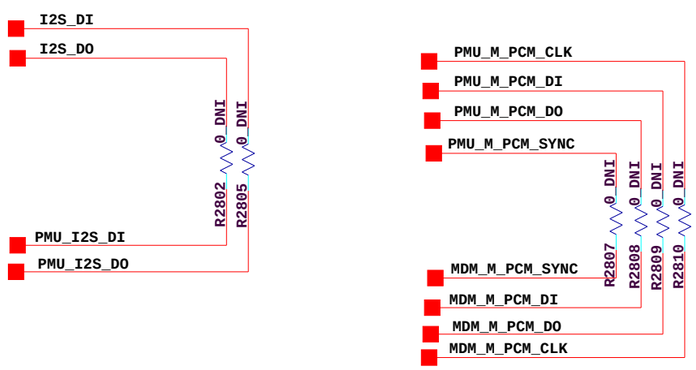

The type and specification of the components refer to the BOM

				NA	2012.06.05
				ECA NO	DATE
DESIGNED	LIPENG 00203199	HD1U9510MT		6714078_SCH2ZH	
REVIEWED	CHAOKANGJIE 00132205				
		VER	PART_NUMBER	SHEET 28 OF 60	
		A	03021TXV	HUAWEI TECH CO.,LTD.	

29.Cap Key

The type and specification of the components refer to the BOM

				NA	2012.06.05
				ECA NO	DATE
DESIGNED	LIPENG 00203199	HD1U9510MT		6714078_SCH2ZH	
REVIEWED	CHAOKANGJIE 00132205				
		VER	PART_NUMBER	SHEET 29 OF 60	
		A	03021TXV	HUAWEI TECH CO.,LTD.	

30.SLIMPORT

The type and specification of the components refer to the BOM

				NA	2012.06.05
				ECA NO	DATE
DESIGNED	LIPENG 00203199	HD1U9510MT		6714078_SCH2ZH	
REVIEWED	CHAOKANGJIE 00132205				
		VER	PART_NUMBER	SHEET 30 OF 60	
		A	03021TXV	HUAWEI TECH CO.,LTD.	

31.MHL

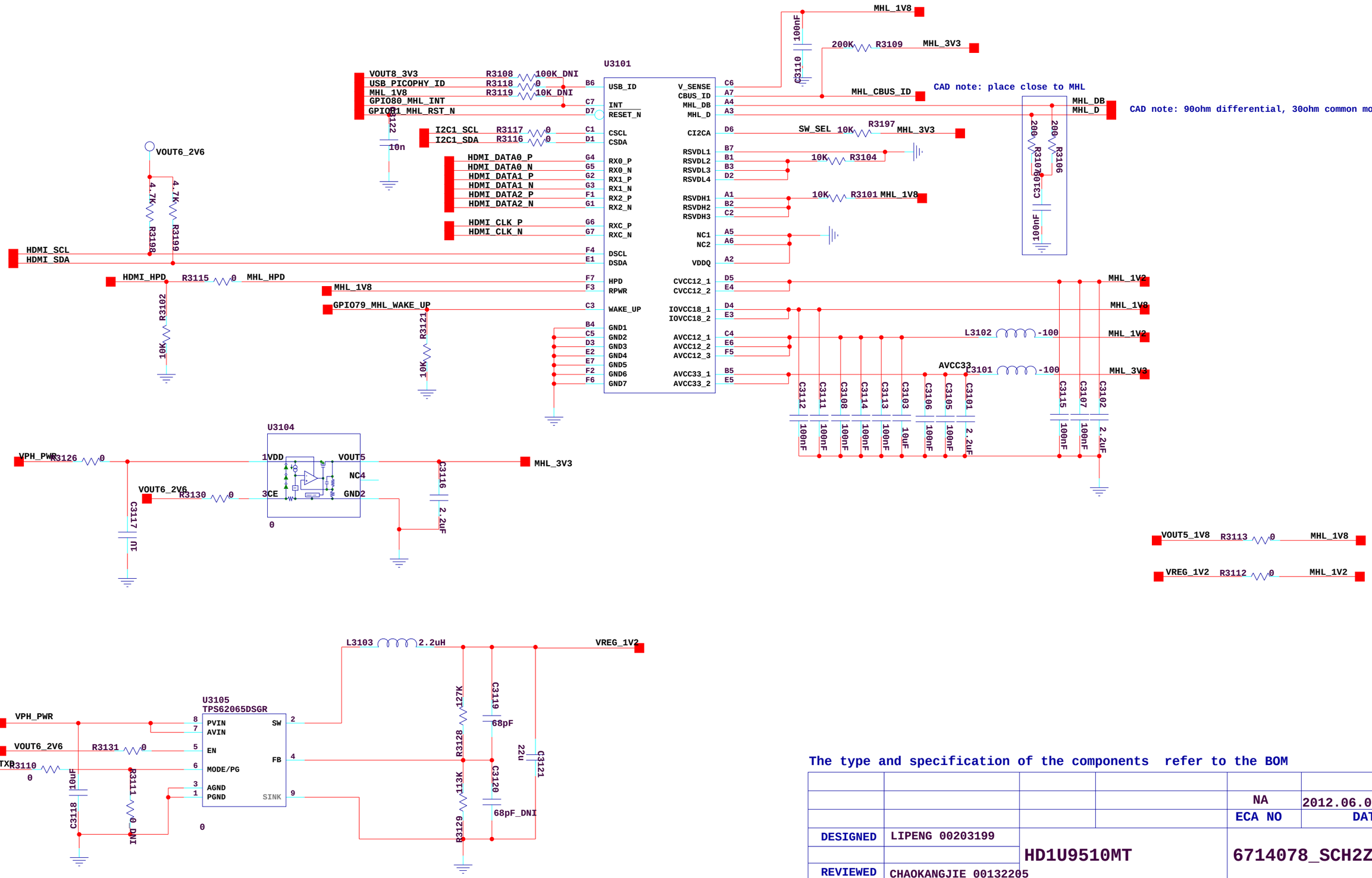

The type and specification of the components refer to the BOM

				NA	2012.06.05
				ECA NO	DATE
DESIGNED	LIPENG 00203199	HD1U9510MT		6714078_SCH2ZH	
REVIEWED	CHAOKANGJIE 00132205				
		VER	PART_NUMBER	SHEET 31 OF 60	
		A	03021TXV	HUAWEI TECH CO.,LTD.	

32.2.85V DCDC

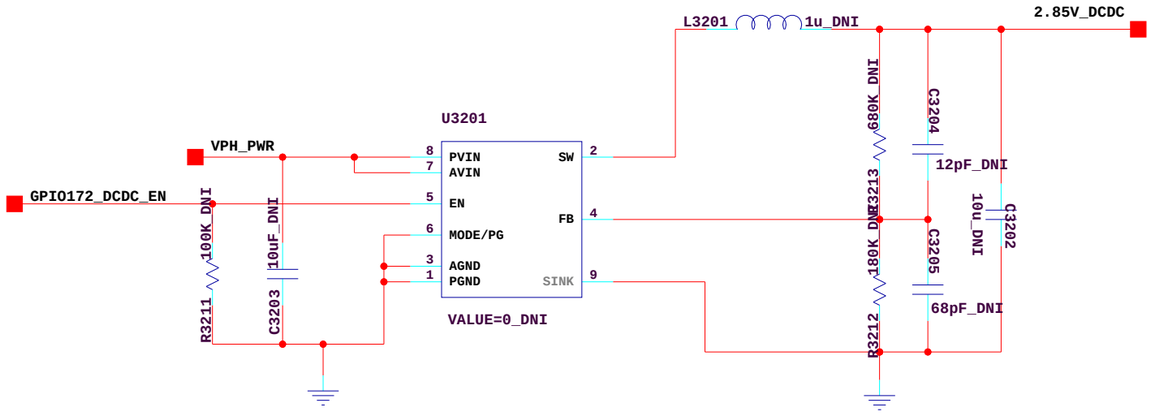

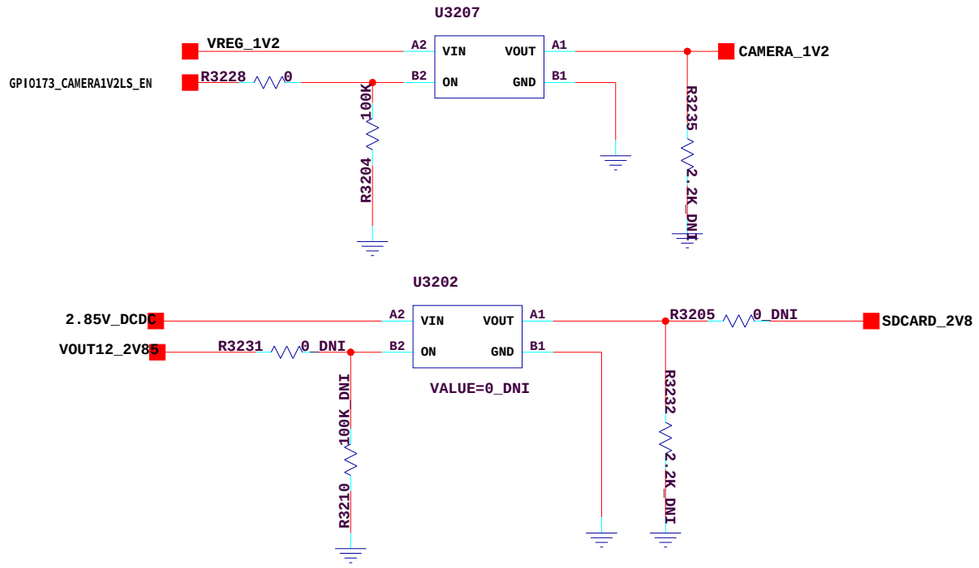

Camera power

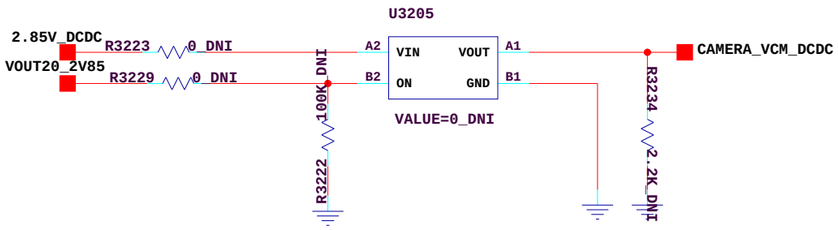

5V BOOST

R1/R2 = (5-1.19)/1.19

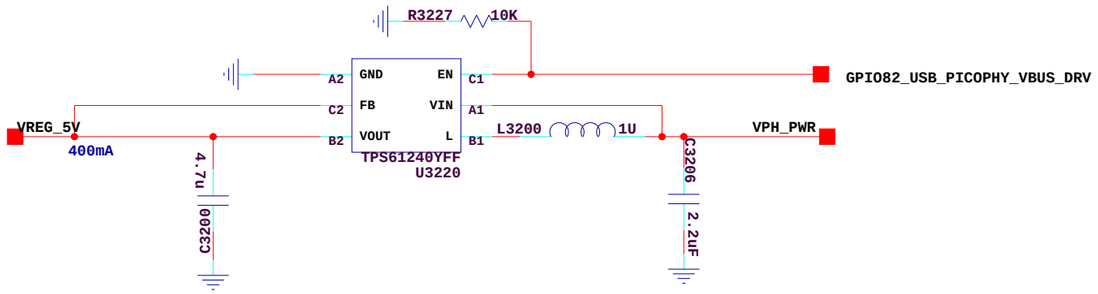

The type and specification of the components refer to the BOM

				NA	2012.06.05
				ECA NO	DATE
DESIGNED	LIPENG 00203199	HD1U9510MT		6714078_SCH2ZH	
REVIEWED	CHAOKANGJIE 00132205				
		VER	PART_NUMBER	SHEET 32 OF 60	
		A	03021TXV	HUAWEI TECH CO.,LTD.	

33. LCD 5.4V DCDC option

The type and specification of the components refer to the BOM

				NA	2012.06.05
				ECA NO	DATE
DESIGNED	LIPENG 00203199	HD1U9510MT		6714078_SCH2ZH	
REVIEWED	CHAOKANGJIE 00132205				
		VER	PART_NUMBER	SHEET 33 OF 60	
		A	03021TXV	HUAWEI TECH CO.,LTD.	

34. BCM4330 BB

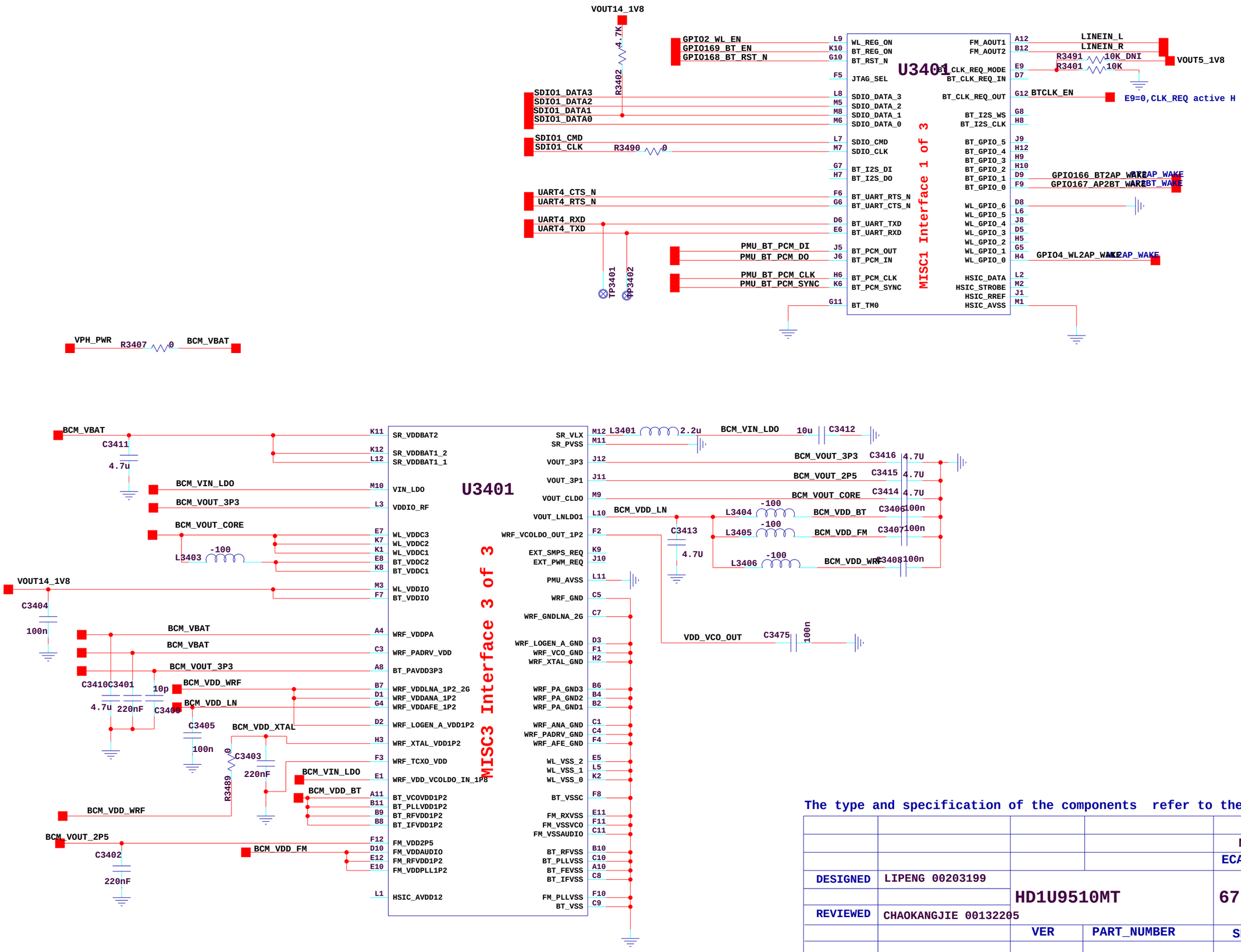

The type and specification of the components refer to the BOM

				NA	2012.06.05
				ECA NO	DATE
DESIGNED	LIPENG 00203199	HD1U9510MT		6714078_SCH2ZH	
REVIEWED	CHAOKANGJIE 00132205				
		VER	PART_NUMBER	SHEET 34 OF 60	
		A	03021TXV	HUAWEI TECH CO.,LTD.	

35. BCM4330 RF

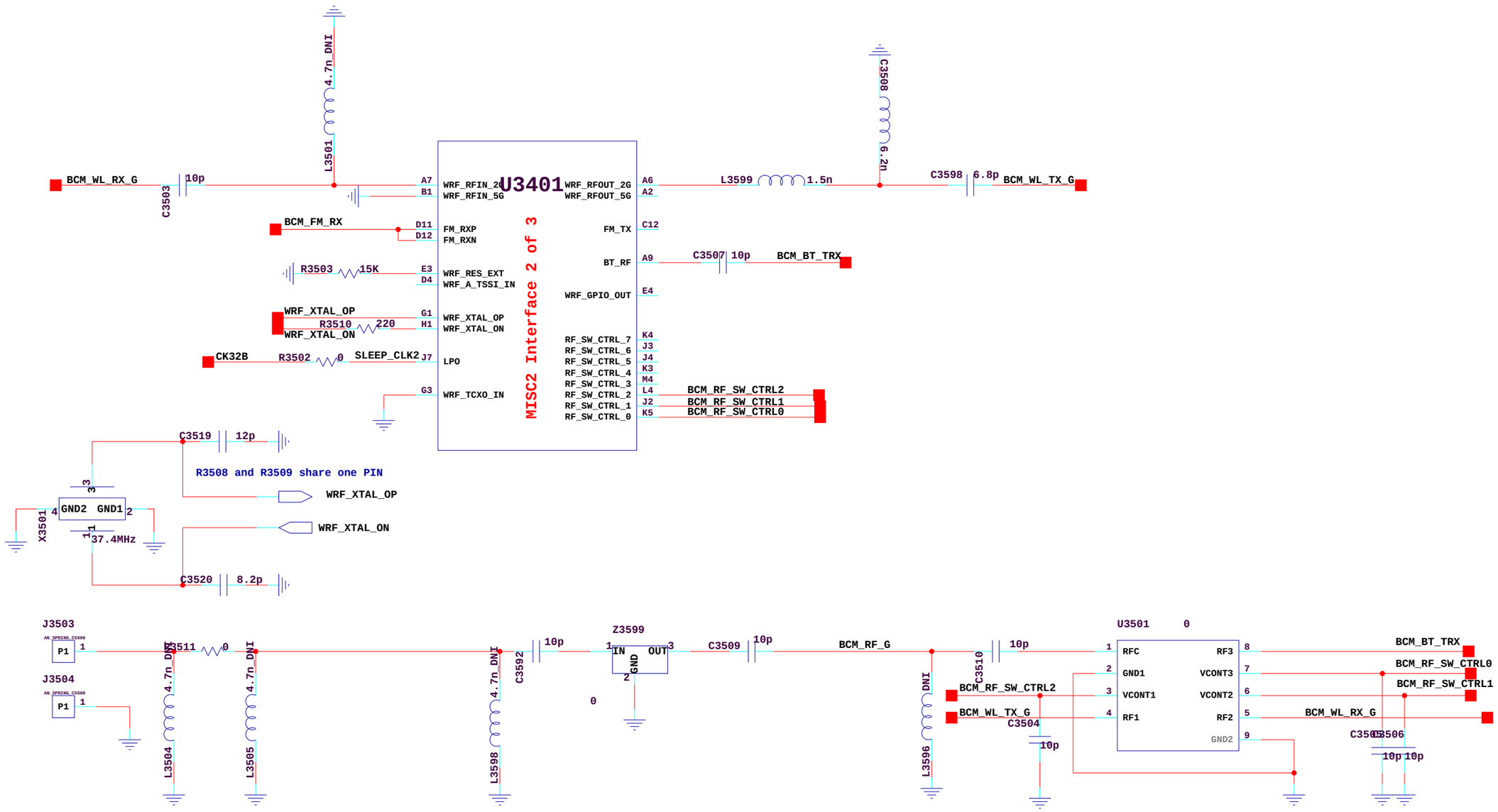

The type and specification of the components refer to the BOM

			NA	2012.06.05	6-14-2012_17:07
				ECA NO	DATE
DESIGNED	LIPENG 00203199	HD1U9510MT		6714078_SCH2ZH	
REVIEWED	CHAOKANGJIE 00132205				
		VER	PART_NUMBER	SHEET 35 OF 60	
		A	03021TXV	HUAWEI TECH CO.,LTD.	

36.BCM47511

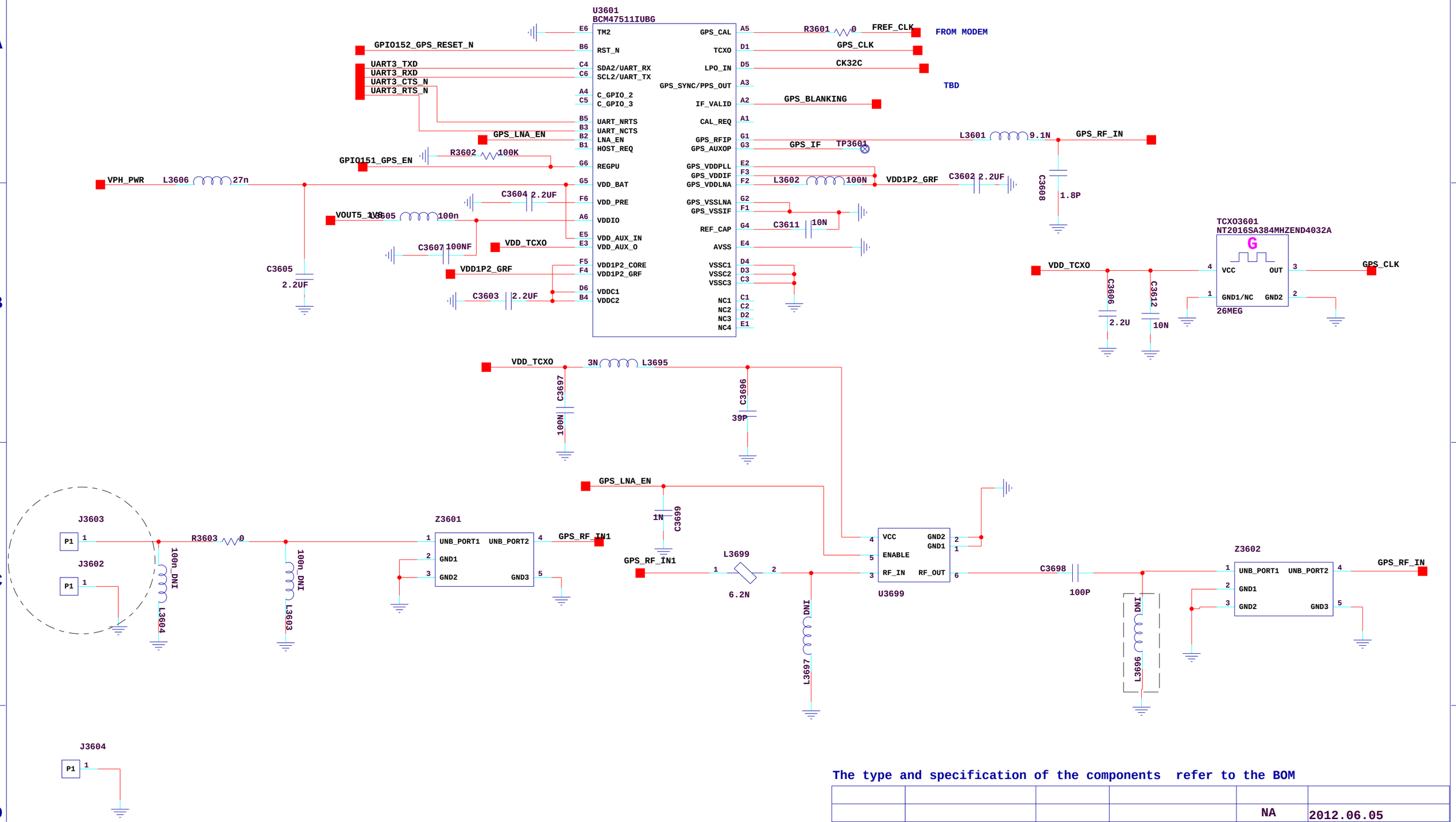

The type and specification of the components refer to the BOM

				NA	2012.06.05
				ECA NO	DATE
DESIGNED	LIPENG 00203199	HD1U9510MT		6714078_SCH2ZH	
REVIEWED	CHAOKANGJIE 00132205				
		VER	PART_NUMBER	SHEET 36 OF 60	
		A	03021TXV	HUAWEI TECH CO.,LTD.	

The type and specification of the components refer to the BOM

				NA	2012.06.05
				ECA NO	DATE
DESIGNED	LIPENG 00203199	HD1U9510MT		6714078_SCH2ZH	
REVIEWED	CHAOKANGJIE 00132205				
		VER	PART_NUMBER	SHEET 37 OF 60	
		A	03021TXV	HUAWEI TECH CO.,LTD.	

The type and specification of the components refer to the BOM

				NA	2012.06.05
				ECA NO	DATE
DESIGNED	LIPENG 00203199	HD1U9510MT		6714078_SCH2ZH	
REVIEWED	CHAOKANGJIE 00132205				
		VER	PART_NUMBER	SHEET 38 OF 60	
		A	03021TXV	HUAWEI TECH CO.,LTD.	

The type and specification of the components refer to the BOM

				NA	2012.06.05
				ECA NO	DATE
DESIGNED	LIPENG 00203199	HD1U9510MT		6714078_SCH2ZH	
REVIEWED	CHAOKANGJIE 00132205				
		VER	PART_NUMBER	SHEET 39 OF 60	
		A	03021TXV	HUAWEI TECH CO.,LTD.	

40 RF SUMMARY

The type and specification of the components refer to the BOM

				NA	2012.06.05
				ECA NO	DATE
DESIGNED	LIPENG 00203199	HD1U9510MT		6714078_SCH2ZH	
REVIEWED	CHAOKANGJIE 00132205				
		VER	PART_NUMBER	SHEET 40 OF 60	
		A	03021TXV	HUAWEI TECH CO.,LTD.	

41 RF BB INTERFACE

The type and specification of the components refer to the BOM

				NA	2012.06.05
				ECA NO	DATE
DESIGNED	LIPENG 00203199	HD1U9510MT		6714078_SCH2ZH	
REVIEWED	CHAOKANGJIE 00132205				
		VER	PART_NUMBER	SHEET 41 OF 60	
		A	03021TXV	HUAWEI TECH CO.,LTD.	

42. RF POWER(SKYWORKS Module)

The type and specification of the components refer to the BOM

				NA	2012.06.05
				ECA NO	DATE
DESIGNED	LIPENG 00203199	HD1U9510MT		6714078_SCH2ZH	
REVIEWED	CHAOKANGJIE 00132205				
		VER	PART_NUMBER	SHEET 42 OF 60	
		A	03021TXV	HUAWEI TECH CO.,LTD.	

43. RF Engine UE2(SkyworksPA Module)

44.RF POWER SUPPLY(SkyworksPA Module)

45. Diversity(SkyworksPA Module)

The type and specification of the components refer to the BOM

				NA	2012.06.05
				ECA NO	DATE
DESIGNED	LIPENG 00203199	HD1U9510MT		6714078_SCH2ZH	
REVIEWED	CHAOKANGJIE 00132205				
		VER	PART_NUMBER	SHEET 45 OF 60	
		A	03021TXV	HUAWEI TECH CO.,LTD.	

46. RF POWER(RFMD Module)

The type and specification of the components refer to the BOM

				NA	2012.06.05
				ECA NO	DATE
DESIGNED	LIPENG 00203199	HD1U9510MT		6714078_SCH2ZH	
REVIEWED	CHAOKANGJIE 00132205				
		VER	PART_NUMBER	SHEET 46 OF 60	
		A	03021TXV	HUAWEI TECH CO.,LTD.	

47. RF ENGINE & FRONTEND(RFMD PA Module)

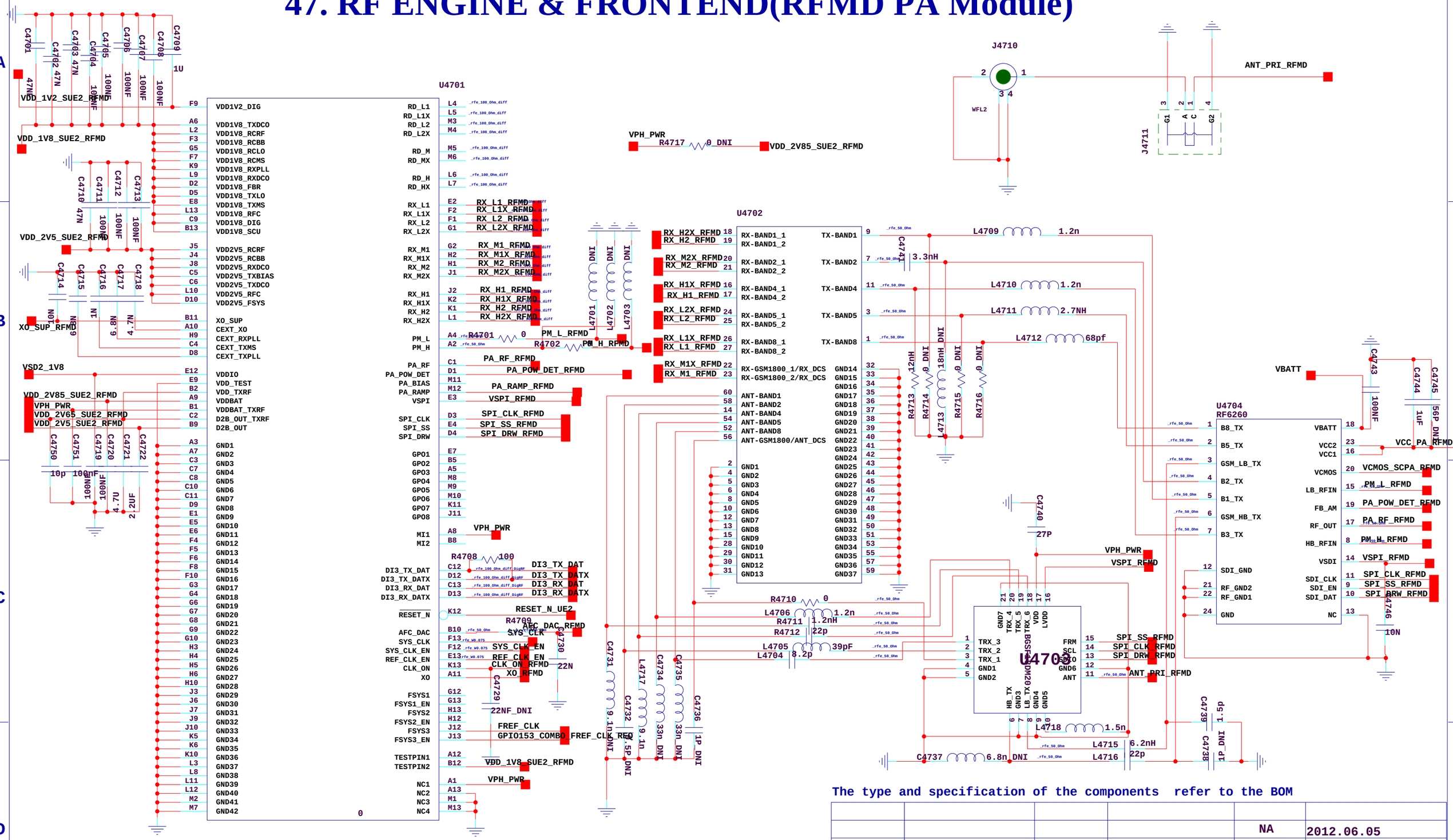

The type and specification of the components refer to the BOM

				NA	2012.06.05
				ECA NO	DATE
DESIGNED	LIPENG 00203199	HD1U9510MT		6714078_SCH2ZH	
REVIEWED	CHAOKANGJIE 00132205				
		VER	PART_NUMBER	SHEET 47 OF 60	
		A	03021TXV	HUAWEI TECH CO.,LTD.	

48.RF POWER SUPPLY(RFMD PA Module)

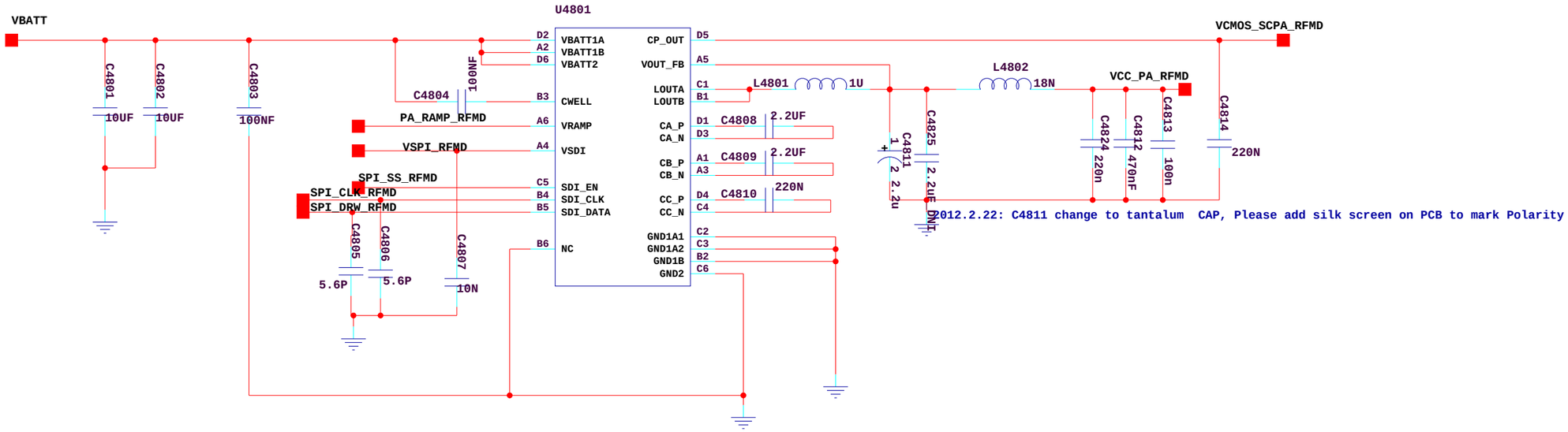

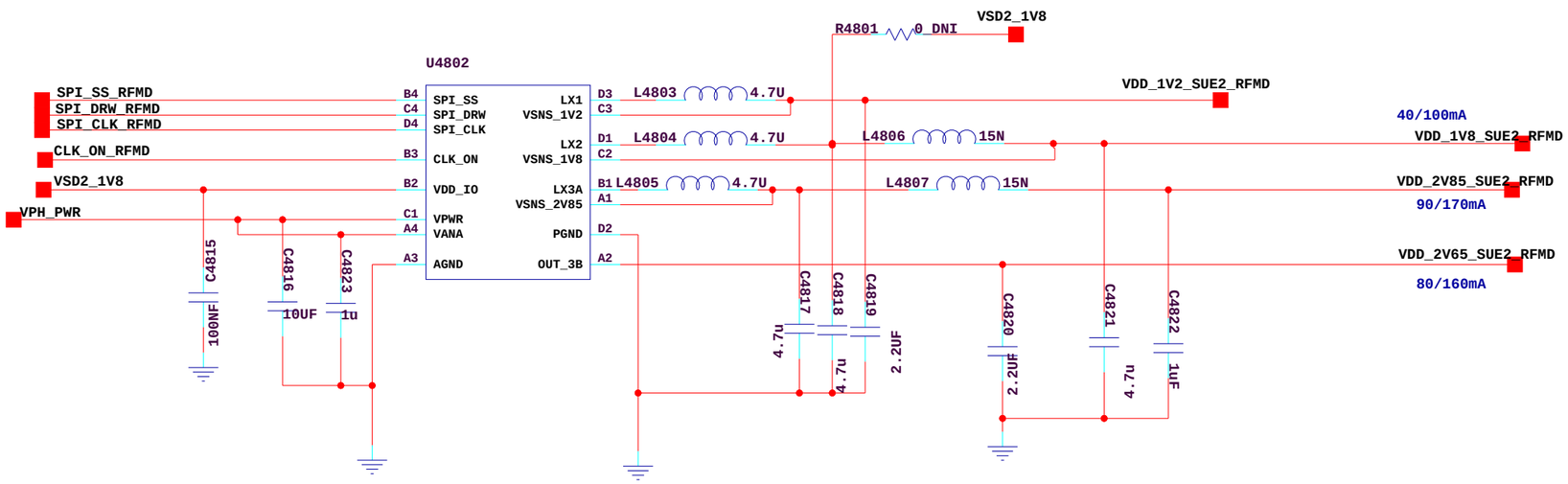

The type and specification of the components refer to the BOM

				NA	2012.06.05
				ECA NO	DATE
DESIGNED	LIPENG 00203199	HD1U9510MT		6714078_SCH2ZH	
REVIEWED	CHAOKANGJIE 00132205				
		VER	PART_NUMBER	SHEET 48 OF 60	
		A	03021TXV	HUAWEI TECH CO.,LTD.	

49. Diversity(RFMD PA Module)

The type and specification of the components refer to the BOM

				NA	2012.06.05
				ECA NO	DATE
DESIGNED	LIPENG 00203199	HD1U9510MT		6714078_SCH2ZH	
REVIEWED	CHAOKANGJIE 00132205				
		VER	PART_NUMBER	SHEET 49 OF 60	
		A	03021TXV	HUAWEI TECH CO.,LTD.	

50. GSM TX

The type and specification of the components refer to the BOM

				NA	2012.06.05
				ECA NO	DATE
DESIGNED	LIPENG 00203199	HD1U9510MT		6714078_SCH2ZH	
REVIEWED	CHAOKANGJIE 00132205				
		VER	PART_NUMBER	SHEET 50 OF 60	
		A	03021TXV	HUAWEI TECH CO.,LTD.	

51. TRANSCEIVER 1

The type and specification of the components refer to the BOM

				NA	2012.06.05
				ECA NO	DATE
DESIGNED	LIPENG 00203199	HD1U9510MT		6714078_SCH2ZH	
REVIEWED	CHAOKANGJIE 00132205				
		VER	PART_NUMBER	SHEET 51 OF 60	
		A	03021TXV	HUAWEI TECH CO.,LTD.	

52. TRANSCEIVER 2

The type and specification of the components refer to the BOM

				NA	2012.06.05
				ECA NO	DATE
DESIGNED	LIPENG 00203199	HD1U9510MT		6714078_SCH2ZH	
REVIEWED	CHAOKANGJIE 00132205				
		VER	PART_NUMBER	SHEET 52 OF 60	
		A	03021TXV	HUAWEI TECH CO.,LTD.	

53. DIVERSITY ANTENNA

The type and specification of the components refer to the BOM

				NA	2012.06.05
				ECA NO	DATE
DESIGNED	LIPENG 00203199	HD1U9510MT		6714078_SCH2ZH	
REVIEWED	CHAOKANGJIE 00132205				
		VER	PART_NUMBER	SHEET 53 OF 60	
		A	03021TXV	HUAWEI TECH CO.,LTD.	

54. DIVERSITY LNA

The type and specification of the components refer to the BOM

				NA	2012.06.05
				ECA NO	DATE
DESIGNED	LIPENG 00203199	HD1U9510MT		6714078_SCH2ZH	
REVIEWED	CHAOKANGJIE 00132205				
		VER	PART_NUMBER	SHEET 54 OF 60	
		A	03021TXV	HUAWEI TECH CO.,LTD.	

55. GPS & BT/WLAN FRONTEND

The type and specification of the components refer to the BOM

				NA	2012.06.05
				ECA NO	DATE
DESIGNED	LIPENG 00203199	HD1U9510MT		6714078_SCH2ZH	
REVIEWED	CHAOKANGJIE 00132205				
		VER	PART_NUMBER	SHEET 55 OF 60	
		A	03021TXV	HUAWEI TECH CO.,LTD.	

56. GPS & BT/WLAN COMBO MODULE

The type and specification of the components refer to the BOM

				NA	2012.06.05
				ECA NO	DATE
DESIGNED	LIPENG 00203199	HD1U9510MT		6714078_SCH2ZH	
REVIEWED	CHAOKANGJIE 00132205				
		VER	PART_NUMBER	SHEET 56 OF 60	
		A	03021TXV	HUAWEI TECH CO.,LTD.	