RF Test Report

Product Name: **Remote Radio Unit**

Product Model: **RRU3953 1900M**

Report Number: **SYBH(R)01668753EB-1**

FCC ID: **QISRRU3953-1900M**

IC: **6369A-3953B1900**

Reliability Laboratory of Huawei Technologies Co., Ltd.

Administration Building, Headquarters of Huawei Technologies Co., Ltd., Bantian, Longgang District, Shenzhen, 518129, P.R.C

Tel: +86 755 28780808 Fax: +86 755 89652518

Notice

1. The laboratory has Passed the accreditation by China National Accreditation Service for Conformity Assessment (CNAS). The accreditation number is L0310.

2. The laboratory has Passed the accreditation by The American Association for Laboratory Accreditation (A2LA). The accreditation number is 2174.01.

3. The laboratory has been listed by the US Federal Communications Commission to perform electromagnetic emission measurements.

- The recognition number for the test site located in Shenzhen is 97456.
- The recognition number for the test site located in Shanghai is 684868.
- The recognition number for the test site located in Chengdu is 216797.

4. The laboratory has been listed by Industry Canada to perform electromagnetic emission measurements.

- The recognition number for the test site located in Shenzhen is 6369A, which contains 6369A-1 (3m chamber in G2), 6369A-2 (3m chamber in K3) and 6369A-3 (10m chamber in K3).
- The recognition numbers for the test site located in Shanghai is 6369D, which contains 6369D-1 (3m chamber) and 6369D-2 (10m chamber).
- The recognition number for the test site located in Chengdu is 6369E-1.

5. The test report is invalid if not marked with the signatures of the persons responsible for preparing and approving the test report.

6. The test report is invalid if there is any evidence of erasure and/or falsification.

7. The test report is only valid for the test samples.

8. Content of the test report, in part or in full, cannot be used for publicity and/or promotional purposes without prior written approval from the laboratory.

Huawei Proprietary and Confidential
Copyright © Huawei Technologies Co., Ltd.

Applicant:	Huawei Technologies Co., Ltd.
Address:	Administration Building, Headquarters of Huawei Technologies Co., Ltd., Bantian, Longgang District, Shenzhen, 518129, P.R.C
Product Name:	Remote Radio Unit
Product Model:	RRU3953 1900M

Date of Receipt Sample:	2014-12-24
Start Date of Test:	2015-01-06
End Date of Test:	2015-01-27

Test Result:	Pass

Approved by Senior Engineer:	2015-02-13	Zhang Xinghai	Zhang Xing hai
	Date	Name	Signature

Prepared by:	2015-02-13	Li Guo	Li Guo
	Date	Name	Signature

Huawei Proprietary and Confidential
Copyright © Huawei Technologies Co., Ltd.

Modification Record

No.	Last Report No.	Modification Description
1	---	First report.

Huawei Proprietary and Confidential
Copyright © Huawei Technologies Co., Ltd.

CONTENT

1 General Information 6
1.1 Applied Standard 6
1.2 Test Location 6
1.3 Test Environment Condition 6
2 Test Summary 7
2.1 PCS Band (1850-1915 MHz paired with 1930-1995 MHz) 7
3 Description of the Equipment under Test (EUT) 10
3.1 General Description 10
3.2 EUT Identity 10
3.3 Technical Specification 11
4 General Test Conditions / Configurations 15
4.1 EUT Configurations 15
4.2 Test Environments 18
4.3 Test Setups 19
4.4 Test Conditions 21
5 Main Test Instruments 25
6 Measurement Uncertainty 26

Huawei Proprietary and Confidential
Copyright © Huawei Technologies Co., Ltd.

1 General Information

1.1 Applied Standard

Applied Rules:	47 CFR FCC Part 2 (10-1-13 Edition) 47 CFR FCC Part 24 (10-1-13 Edition) IC RSS-Gen (Issue 4, November 2014) IC RSS-133 (Issue 6, January 2013)
Test Method: (if applicable)	FCC KDB 971168 D01 Power Meas License Digital Systems v02r02 FCC KDB 662911 D01 Multiple Transmitter Output v02r01

1.2 Test Location

Test Location 1 (TL1):	Reliability Laboratory of Huawei Technologies Co., Ltd.
Address:	Administration Building, Headquarters of Huawei Technologies Co., Ltd., Bantian, Longgang District, Shenzhen, 518129, P.R.C
Test Location 2 (TL2):	Reliability Laboratory of Huawei Technologies Co., Ltd.
Address:	No.2222, Xin Jinqiao Road, Pudong New Area, Shanghai, 201206, P.R.C
Test Location 3 (TL3):	Reliability Laboratory of Huawei Technologies Co., Ltd.
Address:	No.1899 Xiyuan Avenue, Hi-tech Western District, Chengdu, 611731, P.R.C

1.3 Test Environment Condition

Temperature:	15 to 30 °C (Ambient)
Relative Humidity:	20 to 85 % (Ambient)
Atmospheric Pressure:	Not applicable

Huawei Proprietary and Confidential
Copyright © Huawei Technologies Co., Ltd.

2 Test Summary

2.1 PCS Band (1850-1915 MHz paired with 1930-1995 MHz)

2.1.1 Measurement Technical Requirements

Test Item	FCC Rule	IC Rule	Requirements			Test Result	Verdict	Test Location
Transmitter Output Power	§2.1046, §24.232	RSS-Gen,§4.8; RSS-133,§6.4; RSS-133,§4.1	FCC	Base Station	● Average EIRP Power ≤ 1640 W (for EBW ≤ 1 MHz). ● Average EIRP PD ≤ 1640 W/MHz (for EBW > 1 MHz). ● PAPR ≤ 13 dB@0.1%.	Annex A	Pass	TL1
				Mobile Station / Portable Station	● Average EIRP ≤ 2 W. ● PAPR ≤ 13 dB@0.1%.			
			IC	Base Station	● Average EIRP Power ≤ 1640 W (for ChBW ≤ 1 MHz). ● Average EIRP PD ≤ 1640 W/MHz (for ChBW > 1 MHz). ● Average Conducted Power ≤ 100 W. ● PAPR ≤ 13 dB@0.1%.			
				Mobile Station / Hand-held Portable Station	● Average EIRP Power ≤ 2 W. ● PAPR ≤ 13 dB@0.1%.			
Bandwidth	§2.1049, §24.238	RSS-Gen,§4.6; RSS-133,§2.3	FCC	● OBW: No limit. ● EBW (-26 dBc): No limit.		Annex B	Pass	TL1
			IC	● OBW: No limit, May in lieu of EBW (-20 dBc).				

Huawei Proprietary and Confidential
Copyright © Huawei Technologies Co., Ltd.

Test Item	FCC Rule	IC Rule	Requirements			Test Result	Verdict	Test Location
				● EBW (-20 dBc): No limit.				
Band Edges Compliance / Emission Mask	§2.1051, §24.238	RSS-Gen,§4.9; RSS-133,§6.5	FCC	≤ -13 dBm/1%*EBW, in 1 MHz bands immediately outside and adjacent to the frequency block. (EBW is -26 dBc EBW)		Annex C	Pass	TL1
			IC	≤ -13 dBm/1%*EBW, in 1 MHz bands immediately outside and adjacent to the frequency block. (EBW is -20 dBc EBW, or OBW)				
Spurious Emission at Antenna Terminals	§2.1051, §24.238	RSS-Gen,§4.9; RSS-133,§6.5	≤ -13 dBm/1 MHz, from 9 kHz to 10th harmonics but outside authorized operating frequency blocks.			Annex D	Pass	TL1
Field Strength of Spurious Radiation / Radiated Spurious Emissions	§2.1053, §24.238	RSS-Gen,§4.9; RSS-133,§6.5	≤ -13 dBm/1 MHz.			Annex E	Pass	TL3
Frequency Stability	§2.1055, §24.235	RSS-Gen,§4.7; RSS-133,§6.3	FCC	● Test method: Fundamental emissions (Fc_meas) within the authorized frequency block. ● Test conditions: (1) NV, -30°C/…/+50°C step=+10°C. (2) NT, ±15%*NV.		Annex F	Pass	TL1
			IC	Base Station	● Test method option #1: (Fc_meas - Fc_meas@20°C&NV) / Fc_meas@20°C&NV ≤ ±1.0 ppm. ● Test method option#2: EBW (EBW_lower to EBW_higher) within frequency block. ● Test conditions: (1) NV, -30°C/+20°C/+50°C. (2) +20°C, ±15%*NV. (EBW is -20 dBc EBW, or OBW)			
				Mobile Station	● Test method option #1:			

Huawei Proprietary and Confidential
Copyright © Huawei Technologies Co., Ltd.

Test Item	FCC Rule	IC Rule	Requirements			Test Result	Verdict	Test Location
					(Fc_meas - Fc_meas@20°C&NV) / Fc_meas@20°C&NV ≤ ±2.5 ppm. ● Test method option #2: EBW (EBW_lower to EBW_higher) within frequency block. ● Test conditions: (1) NV, -30°C/+20°C/+50°C. (2) +20°C, ±15%*NV. (EBW is -20 dBc EBW, or OBW)			
Receiver Spurious Emissions	---	IC NOTICE 2012-DRS0126	---			Annex G	---	---

2.1.2 Non-measurement Technical Requirements

Description	FCC Rule	IC Rule	Requirements	Test Result	Verdict
Frequency Plan	§24.229	RSS-133,§6.1	1850-1915 MHz paired with 1930-1995 MHz: 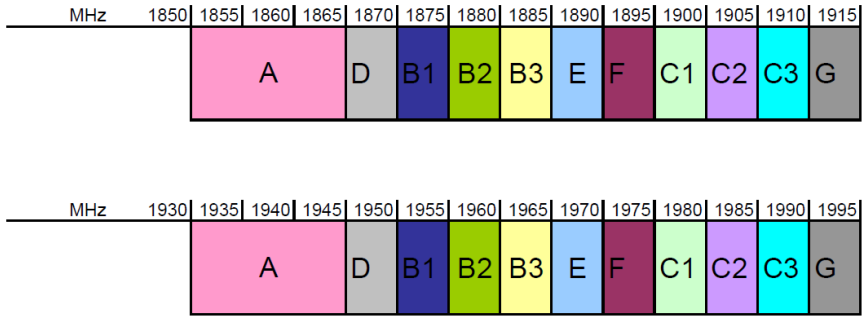 	See technical specification description.	Comply
Modulation Characteristics	§2.1047	RSS-133,§6.2	Digital modulation.	See technical specification description.	Comply

Huawei Proprietary and Confidential
Copyright © Huawei Technologies Co., Ltd.

3 Description of the Equipment under Test (EUT)

3.1 General Description

The RRU3953 is the outdoor remote radio unit which is powered by a power cabinet. It is the radio frequency (RF) module of the distributed base station (DBS) and is installed close to the antenna.

3.2 EUT Identity

NOTE: Unless otherwise noted in the report, the functional boards installed in the units shall be selected from the below list, but not means all the functional boards listed below shall be installed in one unit.

3.2.1 Board

Board		
Board Name	Hardware Version	Description
03022WND	Ver.A	Transceiver Board
03022VBH	Ver.C	PA Board

3.2.2 Sub-Assembly

Sub-Assembly			
Sub-Assembly Name	Model	Manufacturer	Description
UMPT	03021VGH	Huawei	HERT BBU, WD23UMPT, Universal Main Processing & Transmission unit with 4E1 and 2FE/GE interface, 1*1
UBBP	03022HEM	Huawei	Manufactured Board,BBU3900,WD22UBBPd6,Baseband Processing and Interface Unit ,1*1

Huawei Proprietary and Confidential
Copyright © Huawei Technologies Co., Ltd.

3.3 Technical Specification

Characteristics	Description	
Radio System Type	Single Radio Access Technology (Single-RAT):	☒ GSM ☒ UMTS ☒ LTE ☐ CDMA ☐ WiMAX ☐ P2P / P2MP
	Multi-Standard Radio (MSR):	☒ GSM & UMTS ☒ GSM & LTE ☒ UMTS & LTE ☐ GSM & UMTS & LTE ☐ WiMAX & LTE ☐ CDMA & LTE
Equipment Type	#1	☒ Base Station ☐ CPE (Customer Premises Equipment) Station ☐ Subscriber Station (User Equipment) ☐ Fixed Point-to-Point Device
	#2	☒ Fixed Station ☐ Mobile Station ☐ Portable Station
	#3	☐ Indoor Station ☒ Outdoor Station
Supported Frequency Range	Transmission (TX):	1930 to 1990 MHz
	Receiving (RX):	1850 to 1910 MHz
TX and RX Antenna Ports	TX & RX port:	2
	TX-only port:	0
	RX-only port:	2
Multiple Carrier Supported	8. Max	
Maximum RF Bandwidth	40 MHz	
TX Output Power	Max. 80 W (Per antenna port) Max. 160 W (two antenna ports)	
Supported Channel Bandwidth	GSM system:	☒ 200 kHz.
	UMTS system:	☒ 5 MHz.
	LTE system:	☒ 1.4 MHz, ☒ 3 MHz, ☒ 5 MHz, ☒ 10 MHz, ☒ 15 MHz, ☒ 20 MHz.
	CDMA system:	☐ 1.23 MHz, ☐ 1.25 MHz
	WiMAX system:	☐ 5 MHz, ☐ 7 MHz, ☐ 10 MHz
Modulation Type	GSM system:	Base-band: GMSK, 8PSK Carrier: TDMA
	UMTS system:	Base-band: QPSK, 16QAM, 64QAM

Huawei Proprietary and Confidential
Copyright © Huawei Technologies Co., Ltd.

Characteristics	Description	
	LTE system:	Carrier: CDMA Base-band: QPSK, 16QAM,64QAM Carrier: OFDM/OFDMA
Designation of Emissions (Note: the necessary bandwidth of which is the worst value from the measured occupied bandwidths for each type of channel bandwidth configuration.)	GSM system: UMTS system: LTE system:	246KGXW, 246KG7W 4M17F9W 1M11D9W, 2M69D9W, 4M49D9W, 8M97D9W, 13M5D9W, 18M0D9W
Power Supply	Power Supply Type: Nominal Voltage, Input to EUT: Voltage Range, Input to EUT:	☐ External AC mains, ☒ External DC mains, ☐ AC/DC Adapter, ☐ Powered over Ethernet (PoE) -48 VDC -36 to -57 VDC
Antenna Assembles	Antenna Type: Smart Antenna: Antenna Gain: Remark:	☒ External ☐ Integrated ☐ MIMO ☒ Non MIMO 10 dBi (per antenna port, max.) When the EUT is put into service, the practical maximum antenna gain may exceed the value as described above, and if exceed, the combination of the practical output power and the practical antenna gain should NOT exceed the required ERP/EIRP limit.

3.3.1 Transmit Power Description

3.3.1.1 GU MSR System

Carrier configuration	Transmit power (per antenna port)
1*G & 1*U	1*46.0 dBm (GSM) and 1*46.0 dBm (UMTS)
2*G & 1*U	2*43.0 dBm (GSM) and 1*46.0 dBm(UMTS)
3*G & 1*U	3*43.0 dBm (GSM) and 1*43.0 dBm (UMTS) 3*41.8 dBm (GSM) and 1*44.8 dBm (UMTS)
1*G & 2*U	1*46.0 dBm (GSM) and 2*43.0 dBm (UMTS)
2*G & 2*U	1*43.0 dBm (GSM) and 2*43.0 dBm (UMTS)
Note: in the table, the G means GSM, U means UMTS.	

Copyright © Huawei Technologies Co., Ltd.

3.3.1.2 GL MSR System

Carrier configuration	Transmit power (per antenna port)
1*G & 1*L	1*46.0 dBm (GSM) and 1*46.0 dBm (LTE)
2*G & 1*L	2* 43.0 dBm (GSM) and 1*46.0 dBm (LTE)
3*G & 1*L	3*43.0 dBm (GSM) and 1*43.0 dBm (LTE)
4*G & 1*L	4*41.8 dBm (GSM) and 1*43.0 dBm (LTE)
1*G & 2*L	1*43.0 dBm (GSM) and 2*44.8 dBm (LTE)
2*G & 2*L	2*43.0 dBm (GSM) and 2*43.0 dBm (LTE)
Note: in the table,the G means GSM, L means LTE.	

3.3.1.3 UL MSR System

Transmit power (per antenna port)	1*U & 1*L	1*46.0 dBm (UMTS) and 1*46.0 dBm (LTE)
	2*U & 1*L	2*43.0 dBm (UMTS) and 1*46.0 dBm (LTE)
	1*U & 2*L	1*46.0 dBm (UMTS) and 2*43.0 dBm (LTE)
	2*U & 2*L	2*43.0 dBm (UMTS) and 2*43.0 dBm (LTE)

3.3.1.4 GSM System

Carrier configuration	Transmit power (antenna port A)	Transmit power (antenna port B)
1*G	1*49.0 dBm (GMSK) or 1*49.0 dBm (8PSK)	1*49.0 dBm (GMSK) or 1*49.0 dBm (8PSK)
2*G	2*46.0 dBm (GMSK) or 2*46.0 dBm (8PSK)	2*46.0 dBm (GMSK) or 2*46.0 dBm (8PSK)
3*G	3*44.3 dBm (GMSK) or 3*44.3 dBm (GMSK)	3*44.3 dBm (GMSK) or 3*44.3 dBm (GMSK)
4*G	4*43.0 dBm (GMSK) or 4*41.2 dBm (8PSK)	4*43.0 dBm (GMSK) or 4*41.8 dBm (8PSK)
5*G	5*42.0 dBm (GMSK) or 5*40.2 dBm (8PSK)	--
6*G	6*40.8 dBm (GMSK) or 6*39.0 dBm (8PSK)	--
7*G	7*37.8 dBm (GMSK) or 7*36.0 dBm (8PSK)	--
8*G	8*37.0 dBm (GMSK) or 8*35.2 dBm (8PSK)	--
Note: in the table,the G means GSM. When both antenna ports are GSM single-RAT carriers, the total power of two antenna ports is limited below 120W.		

3.3.1.5 UMTS System

Carrier configuration	Transmit power (per antenna port)
1*U	1*49.0 dBm
2*U	2*46.0 dBm
3*U	3*44.0 dBm
4*U	4*43.0 dBm
Note: in the table,the U means UMTS.	

Huawei Proprietary and Confidential
Copyright © Huawei Technologies Co., Ltd.

3.3.1.6 LTE System

Carrier configuration	Transmit power (per antenna port)
1*L	1*47.8 dBm (1.4MHz,3MHz, 5MHz, 10MHz, 15MHz, 20MHz)
2*L	2*46.0 dBm (1.4MHz,3MHz, 5MHz, 10MHz, 15MHz, 20MHz)
Note: in the table,the L means LTE.	

Huawei Proprietary and Confidential
Copyright © Huawei Technologies Co., Ltd.

4 General Test Conditions / Configurations

4.1 EUT Configurations

4.1.1 General

Configuration	Description
Test Antenna Ports	Until otherwise specified, ● All TX tests are ONLY performed at the main TX antenna port (e.g. TRXA, TXA or similar) of the EUT, and ● All RX tests are ONLY performed at the main RX antenna port (e.g. TRXA, RXB or similar) of the EUT.
Multiple RF Sources	Other than the tested RF source of the EUT, other RF source(s) are disabled or shutdown during measurements.

4.1.2 Test Modes

NOTE: The test mode(s) are selected according to relevant radio technology specifications.

Test Mode	Test Modes Description
GSM/GMSK	GSM system, GSM/GPRS, GMSK modulation
GSM/8PSK	GSM system, EDGE, 8PSK modulation
UMTS/TM1	UMTS system, 3GPP TS 25.141 clause 6.1.1, Test Model 1, QPSK modulation
LTE/TM1.1	LTE system, 3GPP TS 36.141 clause 6.1.1, E-TM 1.1
LTE/TM1.2	LTE system, 3GPP TS 36.141 clause 6.1.1, E-TM 1.2
GU/TM1	MSR system, 3GPP TS 37.141 clause 4.9.2 (GSM/GMSK; UMTS/TM1)
GL/TM1	MSR system, 3GPP TS 37.141 clause 4.9.2 (GSM/GMSK; LTE/TM1.1)
UL/TM1	MSR system, 3GPP TS 37.141 clause 4.9.2 (UMTS/TM1, UMTS/TM1)

4.1.3 Test Configurations

EUT Conf.	RF Ch.	Carrier Conf. Description	TX Freq. [MHz]	RX Freq. [MHz]	Ch. BW [MHz]	Power Level [dBm]	Test Mode
1G_TM1_B	B	1*G	1930.4	--	0.2	49.0	GSM/GMSK
1G_TM1_M	M	1*G	1960.0	--	0.2	49.0	GSM/GMSK
1G_TM1_T	T	1*G	1989.6	--	0.2	49.0	GSM/GMSK
1G_TM2_B	B	1*G	1930.4	--	0.2	49.0	GSM/8PSK
1G_TM2_M	M	1*G	1960.0	--	0.2	49.0	GSM/8PSK
1G_TM2_T	T	1*G	1989.6	--	0.2	49.0	GSM/8PSK
4G_TM1_B	B	4*G	1930.4, 1931.0, 1931.6, 1932.2,	--	0.2, 0.2, 0.2, 0.2	43.0, 43.0, 43.0, 43.0	GSM/GMSK
4G_TM1_M	M	4*G	1958.8, 1959.4,	--	0.2, 0.2,	43.0, 43.0,	GSM/GMSK

Copyright © Huawei Technologies Co., Ltd.

EUT Conf.	RF Ch.	Carrier Conf. Description	TX Freq. [MHz]	RX Freq. [MHz]	Ch. BW [MHz]	Power Level [dBm]	Test Mode
			1960.0, 1960.6		0.2, 0.2	43.0, 43.0	
4G_TM1_T	T	4*G	1987.8, 1988.4, 1989, 1989.6	--	0.2, 0.2, 0.2, 0.2	43.0, 43.0, 43.0, 43.0	GSM/GMSK
8G_TM1_B	B	8*G	1930.4, 1931.0, 1931.6, 1932.2, 1932.8, 1933.4, 1934.0, 1934.6	--	0.2, 0.2, 0.2, 0.2, 0.2, 0.2, 0.2, 0.2	37.0, 37.0, 37.0, 37.0, 37.0, 37.0, 37.0, 37.0,	GSM/GMSK
8G_TM1_M	M	8*G	1958.2, 1958.8, 1959.4, 1960.0, 1960.6, 1961.2, 1962.8, 1963.4	--	0.2, 0.2, 0.2, 0.2, 0.2, 0.2, 0.2, 0.2	37.0, 37.0, 37.0, 37.0, 37.0, 37.0, 37.0, 37.0,	GSM/GMSK
8G_TM1_T	T	8*G	1985.4, 1986.0, 1986.6, 1987.2, 1987.8, 1988.4, 1989.0, 1989.6	--	0.2, 0.2, 0.2, 0.2, 0.2, 0.2, 0.2, 0.2	37.0, 37.0, 37.0, 37.0, 37.0, 37.0, 37.0, 37.0,	GSM/GMSK
1U_TM1_B	B	1*U	1932.4	--	5.0	49.0	UMTS/TM1
1U_TM1_M	M	1*U	1960.0	--	5.0	49.0	UMTS/TM1
1U_TM1_T	T	1*U	1987.6	--	5.0	49.0	UMTS/TM1
4U_TM1_B	B	4*U	1932.4, 1937.4, 1962.6, 1967.6	--	5.0, 5.0, 5.0, 5.0	43.0, 43.0, 43.0, 43.0	UMTS/TM1
4U_TM1_M	M	4*U	1942.4, 1947.4, 1972.6, 1977.6	--	5.0, 5.0, 5.0, 5.0	43.0, 43.0, 43.0, 43.0	UMTS/TM1
4U_TM1_T	T	4*U	1952.4, 1935.4, 1982.6, 1987.6	--	5.0, 5.0, 5.0, 5.0	43.0, 43.0, 43.0, 43.0	UMTS/TM1
1L_1.4M_TM1_B	B	1*L	1930.7	--	1.4	47.8	LTE/TM1.1
1L_1.4M_TM1_M	M	1*L	1960.0	--	1.4	47.8	LTE/TM1.1
1L_1.4M_TM1_T	T	1*L	1989.3	--	1.4	47.8	LTE/TM1.1
1L_3M_TM1_B	B	1*L	1931.5	--	3.0	47.8	LTE/TM1.1
1L_3M_TM1_M	M	1*L	1960.0	--	3.0	47.8	LTE/TM1.1
1L_3M_TM1_T	T	1*L	1988.5	--	3.0	47.8	LTE/TM1.1
1L_5M_TM1_B	B	1*L	1932.5	--	5.0	47.8	LTE/TM1.1
1L_5M_TM1_M	M	1*L	1960.0	--	5.0	47.8	LTE/TM1.1
1L_5M_TM1_T	T	1*L	1987.5	--	5.0	47.8	LTE/TM1.1
1L_10M_TM1_B	B	1*L	1935.0	--	10	47.8	LTE/TM1.1
1L_10M_TM1_M	M	1*L	1960.0	--	10	47.8	LTE/TM1.1
1L_10M_TM1_	T	1*L	1985.0	--	10	47.8	LTE/TM1.1

Huawei Proprietary and Confidential
Copyright © Huawei Technologies Co., Ltd.

EUT Conf.	RF Ch.	Carrier Conf. Description	TX Freq. [MHz]	RX Freq. [MHz]	Ch. BW [MHz]	Power Level [dBm]	Test Mode
T							
1L_15M_TM1_B	B	1*L	1937.5	--	15	47.8	LTE/TM1.1
1L_15M_TM1_M	M	1*L	1960.0	--	15	47.8	LTE/TM1.1
1L_15M_TM1_T	T	1*L	1982.5	--	15	47.8	LTE/TM1.1
1L_20M_TM1_B	B	1*L	1940.0	--	20	47.8	LTE/TM1.1
1L_20M_TM1_M	M	1*L	1960.0	--	20	47.8	LTE/TM1.1
1L_20M_TM1_T	T	1*L	1980.0	--	20	47.8	LTE/TM1.1
2L_5M_TM1_B	B	2*L	1932.5, 1967.5	--	5.0, 5.0	46.0, 46.0	LTE/TM1.1
2L_5M_TM1_M	M	2*L	1942.5, 1977.5	--	5.0, 5.0	46.0, 46.0	LTE/TM1.1
2L_5M_TM1_T	T	2*L	1952.5, 1987.5	--	5.0, 5.0	46.0, 46.0	LTE/TM1.1
2G2U_TM1_B	B	GUUG	1930.4, 1947.6, 1952.6, 1969.0	--	0.2, 5.0, 5.0, 0.2	43.0, 43.0, 43.0, 43.0	GU/TM1
2G2U_TM1_M	M	GUUG	1940.2, 1957.6, 1962.6, 1979.8	--	0.2, 5.0, 5.0, 0.2	43.0, 43.0, 43.0, 43.0	GU/TM1
2G2U_TM1_T	T	GUUG	1950.0, 1967.6, 1972.6, 1989.6	--	0.2, 5.0, 5.0, 0.2	43.0, 43.0, 43.0, 43.0	GU/TM1
2G2L_TM1_B	B	GLLG	1930.4, 1947.5, 1952.5, 1969.0	--	0.2, 5.0, 5.0, 0.2	43.0, 43.0, 43.0, 43.0	GL/TM1
2G2L_TM1_M	M	GLLG	1940.2, 1957.5, 1962.5, 1979.8	--	0.2, 5.0, 5.0, 0.2	43.0, 43.0, 43.0, 43.0	GL/TM1
2G2L_TM1_T	T	GLLG	1950.0, 1967.5, 1972.5, 1989.6	--	0.2, 5.0, 5.0, 0.2	43.0, 43.0, 43.0, 43.0	GL/TM1
2U2L_TM1_B	B	UULL	1932.4, 1937.4, 1962.5, 1967.5	--	5.0, 5.0, 5.0, 5.0	43.0, 43.0, 43.0, 43.0	UL/TM1
2U2L_TM1_M	M	UULL	1942.4, 1947.4, 1972.5, 1977.5	--	5.0, 5.0, 5.0, 5.0	43.0, 43.0, 43.0, 43.0	UL/TM1
2U2L_TM1_T	T	UULL	1952.5, 1957.5 1982.6, 1987.6	--	5.0, 5.0, 5.0, 5.0	43.0, 43.0, 43.0, 43.0	UL/TM1

Huawei Proprietary and Confidential
Copyright © Huawei Technologies Co., Ltd.

4.2 Test Environments

Environment Parameter	Selected Values During Tests		
	Temperature	Voltage	Relative Humidity
Ambient Climate	Ambient	---	Ambient
Rated Voltage	---	-48 VDC	---

Huawei Proprietary and Confidential
Copyright © Huawei Technologies Co., Ltd.

4.3 Test Setups

4.3.1 Test Setup 1

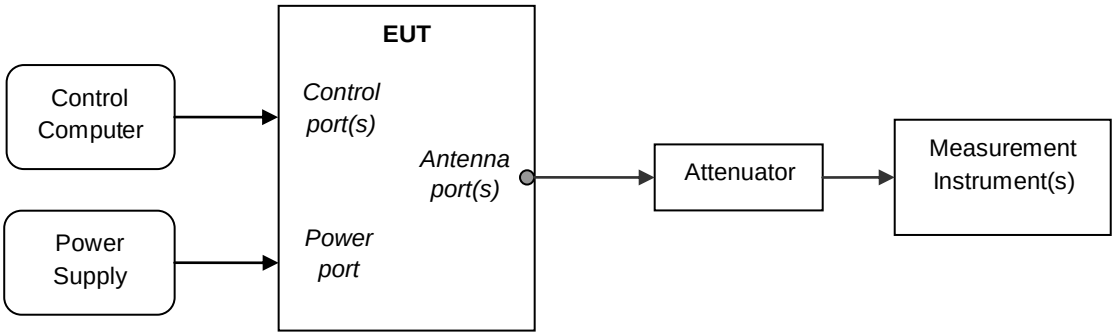

4.3.2 Test Setup 2

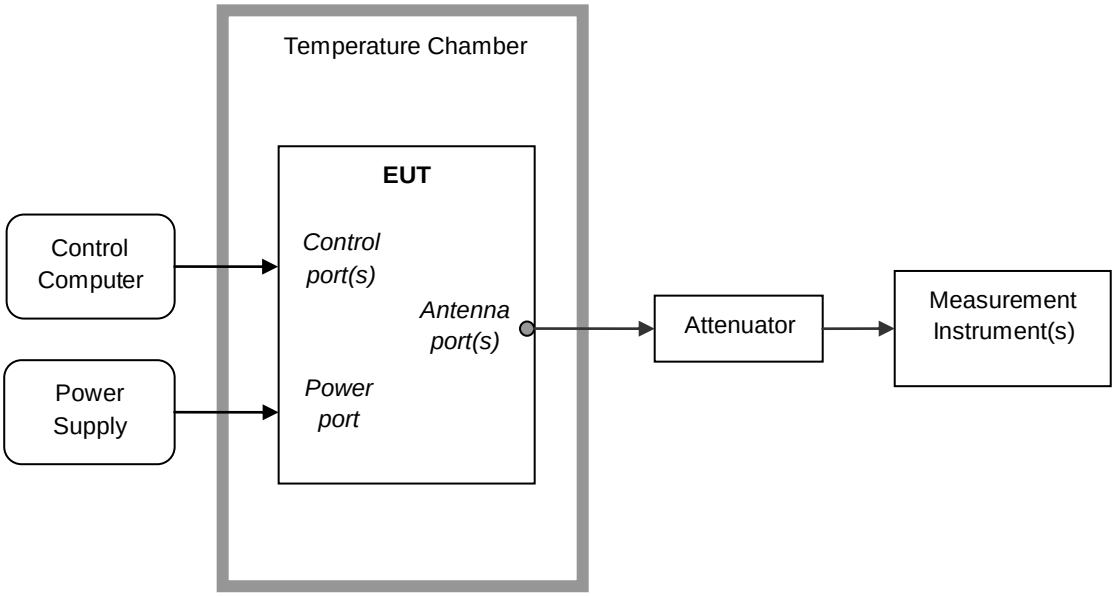

4.3.3 Test Setup 3

NOTE: Effective radiated power (ERP) refers to the radiation power output of the EUT, assuming all emissions are radiated from half-wave dipole antennas.

4.3.3.1 Step 1: Pre-test

Huawei Proprietary and Confidential
Copyright © Huawei Technologies Co., Ltd.

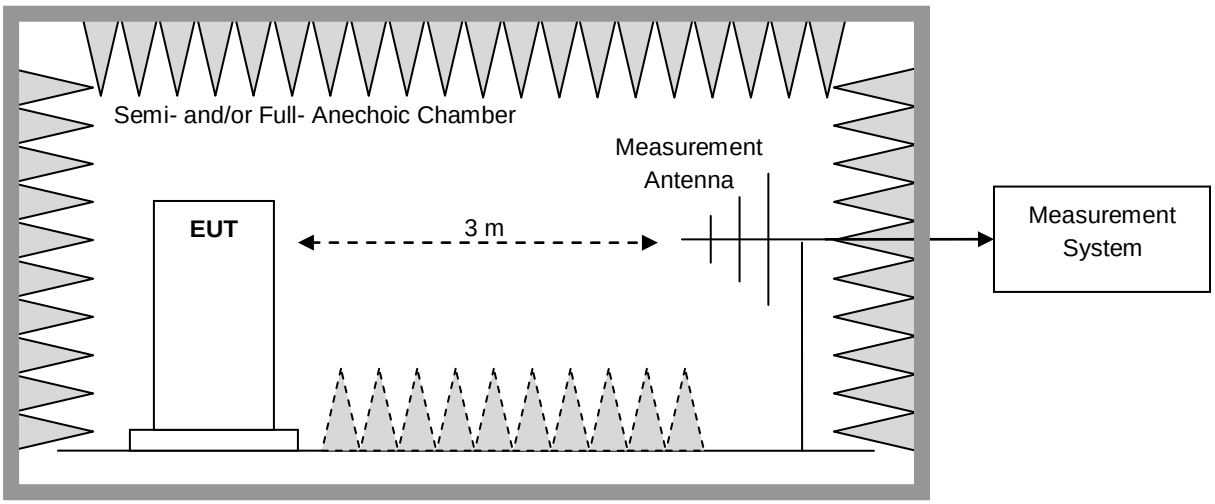

4.3.3.2 Step 2: Substitution method to verify the maximum ERP

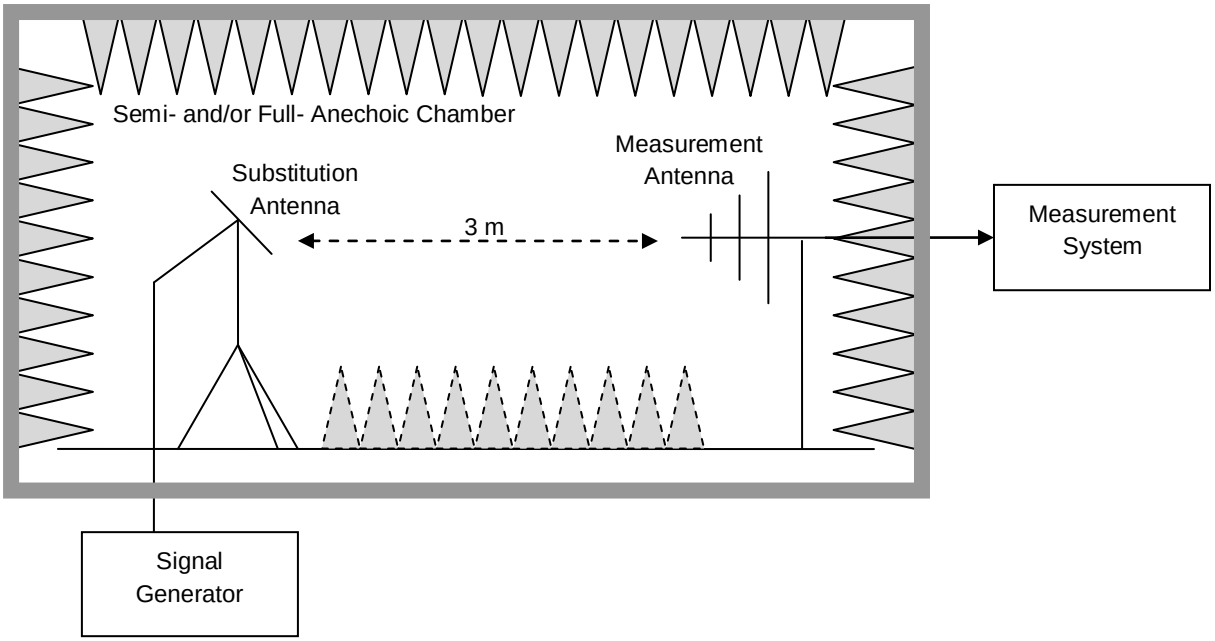

Copyright © Huawei Technologies Co., Ltd.

4.4 Test Conditions

Test Case		Test Conditions	
Transmitter Output Power	Channel Power, Total	Test Env.	Ambient Climate & Rated Voltage
		Test Setup	Test Seup 1
		EUT Conf.	1G_TM1_B, 1G_TM1_M, 1G_TM1_T, 1G_TM2_B, 1G_TM2_M, 1G_TM2_T, 4G_TM1_B, 4G_TM1_M, 4G_TM1_T, 8G_TM1_B, 8G_TM1_M, 8G_TM1_T, 1U_TM1_B, 1U_TM1_M, 1U_TM1_T, 4U_TM1_B, 4U_TM1_M, 4U_TM1_T, 1L_1.4M_TM1_B, 1L_1.4M_TM1_M, 1L_1.4M_TM1_T, 1L_3M_TM1_B, 1L_3M_TM1_M, 1L_3M_TM1_T, 1L_5M_TM1_B, 1L_5M_TM1_M, 1L_5M_TM1_T, 1L_10M_TM1_B, 1L_10M_TM1_M, 1L_10M_TM1_T, 1L_15M_TM1_B, 1L_15M_TM1_M, 1L_15M_TM1_T, 1L_20M_TM1_B, 1L_20M_TM1_M, 1L_20M_TM1_T, 2L_5M_TM1_B, 2L_5M_TM1_M, 2L_5M_TM1_T, 2G2U_TM1_B, 2G2U_TM1_M, 2G2U_TM1_T, 2G2L_TM1_B, 2G2L_TM1_M, 2G2L_TM1_T, 2U2L_TM1_B, 2U2L_TM1_M, 2U2L_TM1_T,
	Power Spectral Density	Test Env.	Ambient Climate & Rated Voltage
		Test Setup	Test Seup 1
		EUT Conf.	1G_TM1_B, 1G_TM1_M, 1G_TM1_T, 1G_TM2_B, 1G_TM2_M, 1G_TM2_T, 1U_TM1_B, 1U_TM1_M, 1U_TM1_T, 1L_1.4M_TM1_B, 1L_1.4M_TM1_M, 1L_1.4M_TM1_T, 1L_3M_TM1_B, 1L_3M_TM1_M, 1L_3M_TM1_T, 1L_5M_TM1_B, 1L_5M_TM1_M, 1L_5M_TM1_T, 1L_10M_TM1_B, 1L_10M_TM1_M, 1L_10M_TM1_T, 1L_15M_TM1_B, 1L_15M_TM1_M, 1L_15M_TM1_T, 1L_20M_TM1_B, 1L_20M_TM1_M, 1L_20M_TM1_T,
	Peak-to-Average Ratio	Test Env.	Ambient Climate & Rated Voltage
		Test Setup	Test Seup 1
		EUT Conf.	1G_TM1_B, 1G_TM1_M, 1G_TM1_T, 1G_TM2_B, 1G_TM2_M, 1G_TM2_T, 1U_TM1_B, 1U_TM1_M, 1U_TM1_T, 1L_1.4M_TM1_B, 1L_1.4M_TM1_M, 1L_1.4M_TM1_T, 1L_3M_TM1_B, 1L_3M_TM1_M, 1L_3M_TM1_T, 1L_5M_TM1_B, 1L_5M_TM1_M, 1L_5M_TM1_T, 1L_10M_TM1_B, 1L_10M_TM1_M, 1L_10M_TM1_T, 1L_15M_TM1_B, 1L_15M_TM1_M, 1L_15M_TM1_T, 1L_20M_TM1_B, 1L_20M_TM1_M, 1L_20M_TM1_T,

Huawei Proprietary and Confidential
Copyright © Huawei Technologies Co., Ltd.

Test Case		Test Conditions	
Bandwidth	Occupied Bandwidth	Test Env.	Ambient Climate & Rated Voltage
		Test Setup	Test Seup 1
		EUT Conf.	1G_TM1_B, 1G_TM1_M, 1G_TM1_T, 1G_TM2_B, 1G_TM2_M, 1G_TM2_T, 1U_TM1_B, 1U_TM1_M, 1U_TM1_T, 1L_1.4M_TM1_B, 1L_1.4M_TM1_M, 1L_1.4M_TM1_T, 1L_3M_TM1_B, 1L_3M_TM1_M, 1L_3M_TM1_T, 1L_5M_TM1_B, 1L_5M_TM1_M, 1L_5M_TM1_T, 1L_10M_TM1_B, 1L_10M_TM1_M, 1L_10M_TM1_T, 1L_15M_TM1_B, 1L_15M_TM1_M, 1L_15M_TM1_T, 1L_20M_TM1_B, 1L_20M_TM1_M, 1L_20M_TM1_T,
	Emission Bandwidth	Test Env.	Ambient Climate & Rated Voltage
		Test Setup	Test Seup 1
		EUT Conf.	1G_TM1_B, 1G_TM1_M, 1G_TM1_T, 1G_TM2_B, 1G_TM2_M, 1G_TM2_T, 1U_TM1_B, 1U_TM1_M, 1U_TM1_T, 1L_1.4M_TM1_B, 1L_1.4M_TM1_M, 1L_1.4M_TM1_T, 1L_3M_TM1_B, 1L_3M_TM1_M, 1L_3M_TM1_T, 1L_5M_TM1_B, 1L_5M_TM1_M, 1L_5M_TM1_T, 1L_10M_TM1_B, 1L_10M_TM1_M, 1L_10M_TM1_T, 1L_15M_TM1_B, 1L_15M_TM1_M, 1L_15M_TM1_T, 1L_20M_TM1_B, 1L_20M_TM1_M, 1L_20M_TM1_T,
Band Edges Compliance / Emission Mask		Test Env.	Ambient Climate & Rated Voltage
		Test Setup	Test Seup 1
		EUT Conf.	1G_TM1_B, 1G_TM1_T, 1G_TM2_B, 1G_TM2_T, 4G_TM1_B, 4G_TM1_T, 1U_TM1_B, 1U_TM1_T, 4U_TM1_B, 4U_TM1_T, 1L_1.4M_TM1_B, 1L_1.4M_TM1_T, 1L_3M_TM1_B, 1L_3M_TM1_T, 1L_5M_TM1_B, 1L_5M_TM1_T, 1L_10M_TM1_B, 1L_10M_TM1_T, 1L_15M_TM1_B, 1L_15M_TM1_T, 1L_20M_TM1_B, 1L_20M_TM1_T, 2L_5M_TM1_B, 2L_5M_TM1_T, 2G2U_TM1_B, 2G2U_TM1_T, 2G2L_TM1_B, 2G2L_TM1_T, 2U2L_TM1_B, 2U2L_TM1_T,
Spurious Emission at Antenna Terminals		Test Type	☒ Conducted ☐ Radiated (go to test case of Field Strength of Spurious Radiation / Radiated Spurious Emissions) NOTE: According to FCC §2.1053 and KDB 971168 §6.1&§5.8, in the cases of the EUTs that are portable or hand-held devices utilizing one or more integral transmit antennas, measurements cannot be performed in a conducted measurement configuration, it becomes necessary to

Copyright © Huawei Technologies Co., Ltd.

Test Case	Test Conditions	
		perform the described compliance measurements in a radiated test arrangement.
	Test Env.	Ambient Climate & Rated Voltage
	Test Setup	Test Seup 1
	EUT Conf.	1G_TM1_B, 1G_TM1_M, 1G_TM1_T, 1G_TM2_B, 1G_TM2_M, 1G_TM2_T, 4G_TM1_B, 4G_TM1_M, 4G_TM1_T, 8G_TM1_B, 8G_TM1_M, 8G_TM1_T, 1U_TM1_B, 1U_TM1_M, 1U_TM1_T, 4U_TM1_B, 4U_TM1_M, 4U_TM1_T, 1L_1.4M_TM1_B, 1L_1.4M_TM1_M, 1L_1.4M_TM1_T, 1L_3M_TM1_B, 1L_3M_TM1_M, 1L_3M_TM1_T, 1L_5M_TM1_B, 1L_5M_TM1_M, 1L_5M_TM1_T, 1L_10M_TM1_B, 1L_10M_TM1_M, 1L_10M_TM1_T, 1L_15M_TM1_B, 1L_15M_TM1_M, 1L_15M_TM1_T, 1L_20M_TM1_B, 1L_20M_TM1_M, 1L_20M_TM1_T, 2L_5M_TM1_B, 2L_5M_TM1_M, 2L_5M_TM1_T, 2G2U_TM1_B, 2G2U_TM1_M, 2G2U_TM1_T, 2G2L_TM1_B, 2G2L_TM1_M, 2G2L_TM1_T, 2U2L_TM1_B, 2U2L_TM1_M, 2U2L_TM1_T,
Field Strength of Spurious Radiation / Radiated Spurious Emissions	Test Type	☐ Field Strength of Spurious Radiation ☒ Radiated Spurious Emissions NOTE: According to FCC §2.1053 and KDB 971168, when antenna-port conducted measurements (i.e. Spurious Emission at Antenna Terminals measurement) are performed to demonstrate compliance to the applicable unwanted emission limits, a separate radiated measurement (i.e. this Field Strength of Spurious Radiation measurement) is required to detect spurious emissions that may be radiated directly from the cabinet, control circuits, power leads, or intermediate circuit elements under normal conditions of installation and operation (, and with the transmit antenna port(s) terminated). Note that when radiated measurements for spurious emissions at antenna terminals are performed to demonstrate compliance to the unwanted emission limits (e.g., an EUT with integral transmit antenna), the field strength of spurious radiation measurement is not required.
	Test Env.	Ambient Climate & Rated Voltage
	Test Setup	Test Seup 3
	EUT Conf.	1G_TM1_M

Copyright © Huawei Technologies Co., Ltd.

Test Case		Test Conditions	
			NOTE: If applicable, the EUT Conf. that has maximum power density (based on the equivalent power level) is selected.
Frequency Stability	Frequency Error	Test Env.	(1) -30 °C to +50 °C with step 10 °C at Rated Voltage; (2) 85%, 100% and 115% of Rated Voltage at Ambient Climate.
		Test Setup	Test Seup 2
		EUT Conf.	1L_5M_TM1_M NOTE: A representative EUT Conf. was selected since the un-modulation carrier configuration was required by the standards/rules.
	Frequency Range (if required)	Test Env.	Ambient Climate & Rated Voltage
		Test Setup	Test Seup 2
		EUT Conf.	--
Receiver Spurious Emissions		Test Env.	Ambient Climate & Rated Voltage
		Test Setup	Test Seup 1
		EUT Conf.	--

Huawei Proprietary and Confidential
Copyright © Huawei Technologies Co., Ltd.

5 Main Test Instruments

NOTE 1: NCR = No calibration required, VOU = Verified on use.

NOTE 2: Unless otherwise specified, the calibration intervals for test instruments were Annual (per year). The other intervals, if applicable, are marked with (##y), which denotes ## years calibration interval.

Equipment Name	Manufacturer	Model	Serial Number	Cal. Due
Test Setup 1 & 2				
Spectrum Analyzer	R&S	FSQ26	201082	2015-03-18
Test Setup 3				
EMI test receiver	Agilent	N9038A	MY52260169	2015-11-23
Spectrum analyser	Agilent	N9010A	MY52220816	2015-03-17
Bilog antenna	TESEQ	CBL 6112B	35238	2015-12-01
Bilog antenna	TESEQ	CBL 6112B	35239	2015-12-01
Horn antenna	SWARZBECK	BBHA 9120D	1077	2015-12-01
Horn antenna	SWARZBECK	BBHA 9120D	1078	2015-12-01

Huawei Proprietary and Confidential
Copyright © Huawei Technologies Co., Ltd.

6 Measurement Uncertainty

For a 95% confidence level (k = 2), the measurement expanded uncertainties for defined systems, in accordance with the recommendations of ISO 17025 as following:

Test Item		Extended Uncertainty
Transmitter Output Power	Power [dBm]	U = 0.39 dB
Bandwidth	Magnitude [%]	U = 0.2%
Band Edge Compliance	Disturbance Power [dBm]	U = 2.0 dB
Spurious Emissions, Conducted	Disturbance Power [dBm]	U = 2.0 dB
Field Strength of Spurious Radiation / Radiated Spurious Emissions	Power [dBm] / Field Strength [dBμV/m]	For 3 m Chamber: U = 4.15 dB (30 MHz-1 GHz) U = 3.64 dB (1 GHz-18 GHz) U = 3.26 dB (18 GHz-26.5 GHz) U = 3.83 dB (26.5 GHz-40 GHz) For 10 m Chamber: U = 4.8 dB (30MHz to 1GHz) U = 4.3 dB (1 GHz to 26.5GHz)
Frequency Stability	Frequency Accuracy [ppm]	U = 0.21 ppm

END

Huawei Proprietary and Confidential
Copyright © Huawei Technologies Co., Ltd.