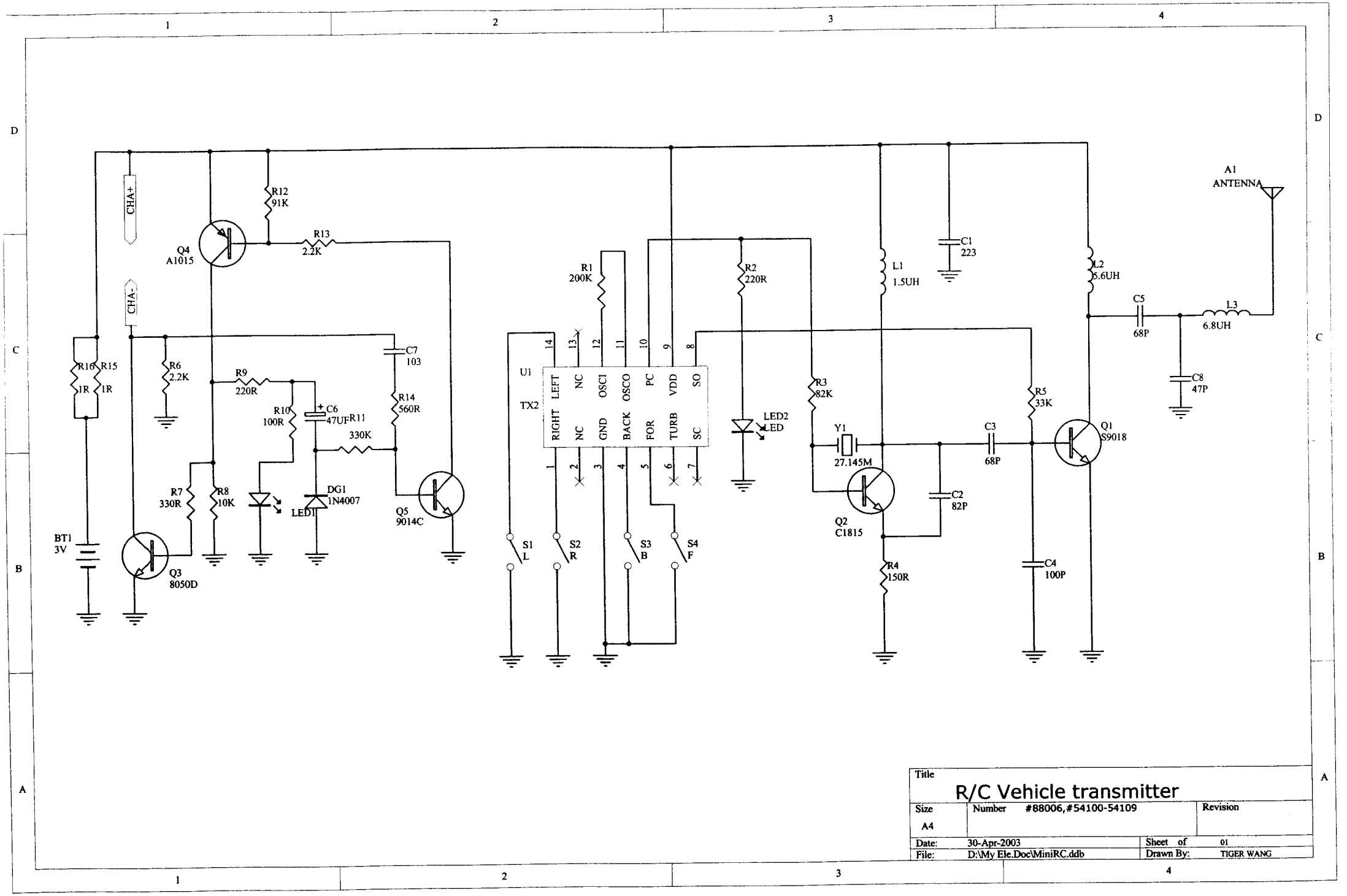

Title	R/C Vehicle transmitter		
Size A4	Number #88006,#54100-54109		Revision
Date: 30-Apr-2003		Sheet of 01	
File: D:\My Ele.Doc\MiniRC.ddb		Drawn By: TIGER WANG	