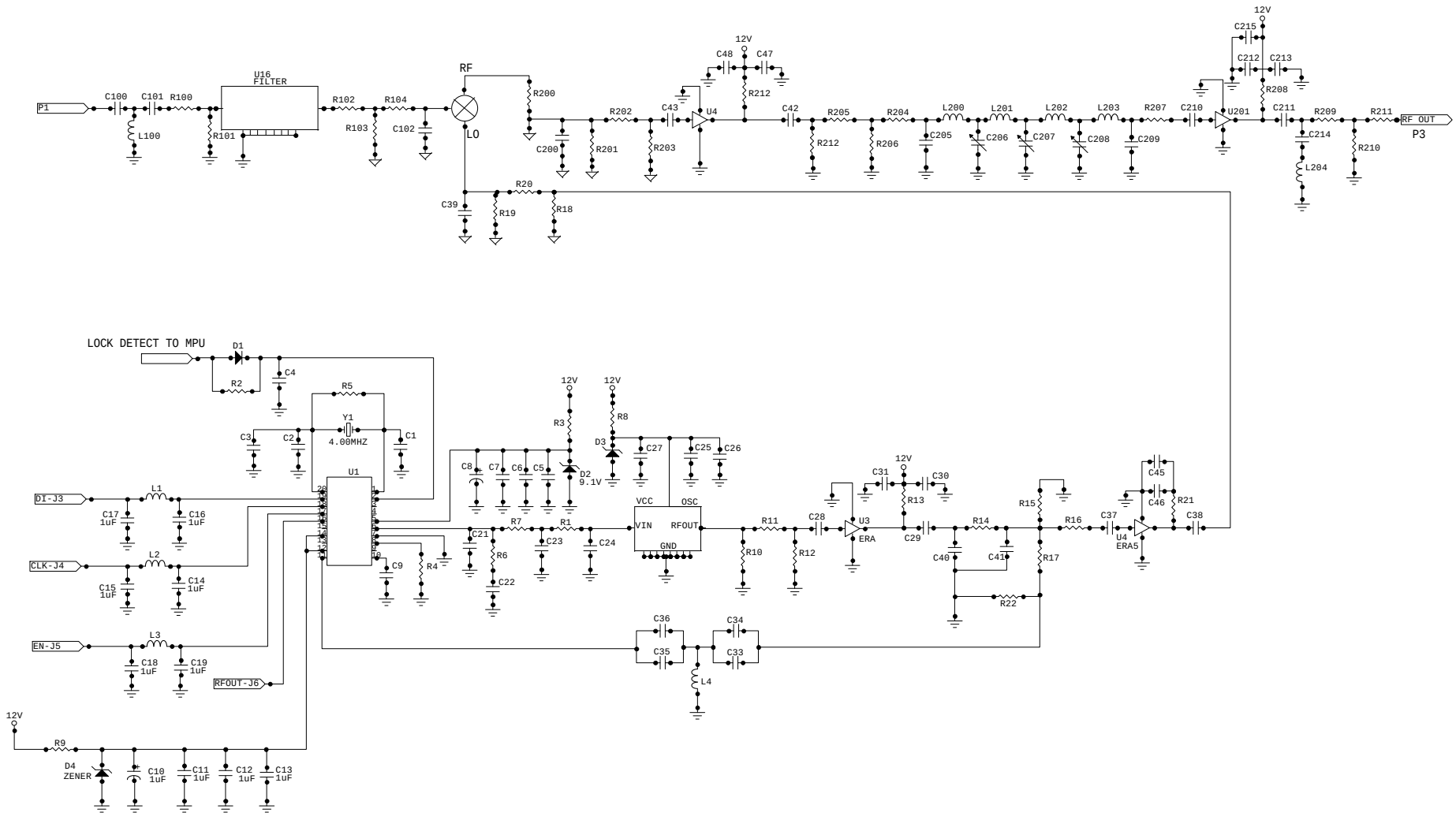

Technalogix Ltd.
#4, 8021 Edger Industrial Place
Red Deer, Alberta, Canada T4P 3R3

750MHz Down Converter

Rev	ID
B	

Date: 9/11/2000 | Page: 1 of 1