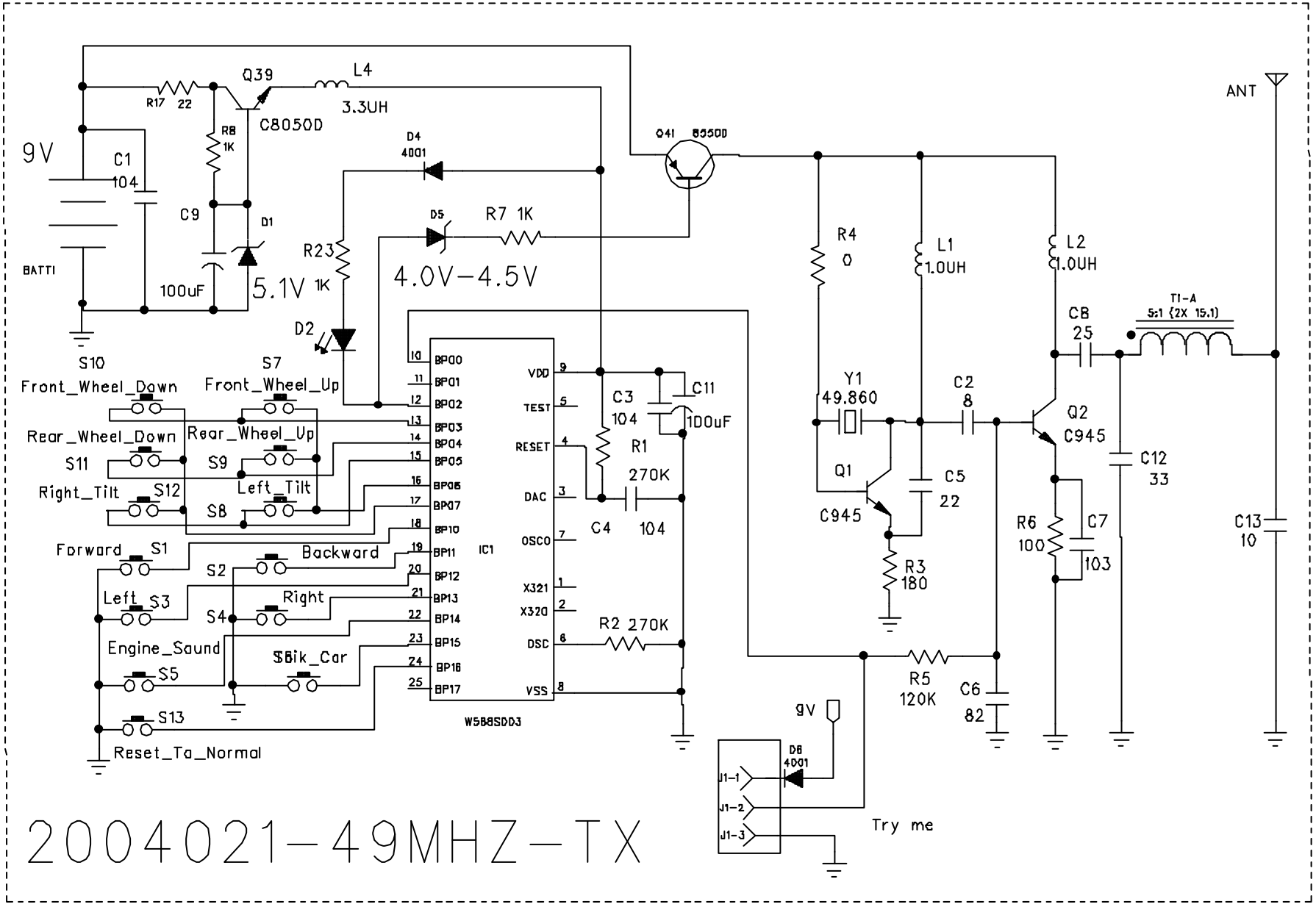
9V
BATTI
C1
104
R17 22
Q39
C8050D
L4
3.3UH
R8
1K
C9
100uF
D1
5.1V
D4
4001
D5
R7 1K
R23
1K
4.0V-4.5V
D2
Q41 8550D
R4
0
L1
1.0UH
L2
1.0UH
ANT
T1-A
5:1 (2X 15.1)
C8
25
Y1
49.860
C2
8
Q2
C945
C12
33
Q1
C945
C5
22
R3
180
R6
100
C7
103
C13
10
C3
104
C11
100uF
R1
270K
C4
104
R2 270K
R5
120K
C6
82
IC1
W588SDD3
VDD
TEST
RESET
DAC
OSCO
X321
X320
DSC
VSS
BP00
BP01
BP02
BP03
BP04
BP05
BP06
BP07
BP10
BP11
BP12
BP13
BP14
BP15
BP16
BP17
S10
Front_Wheel_Down
S7
Front_Wheel_Up
Rear_Wheel_Down
S11
Rear_Wheel_Up
S9
Right_Tilt
S12
Left_Tilt
S8
Forward
S1
Backward
S2
Left
S3
Right
S4
Engine_Sound
S5
Bik_Car
S6
S13
Reset_To_Normal
9V
D8
4001
J1-1
J1-2
J1-3
Try me
2004021-49MHZ-TX