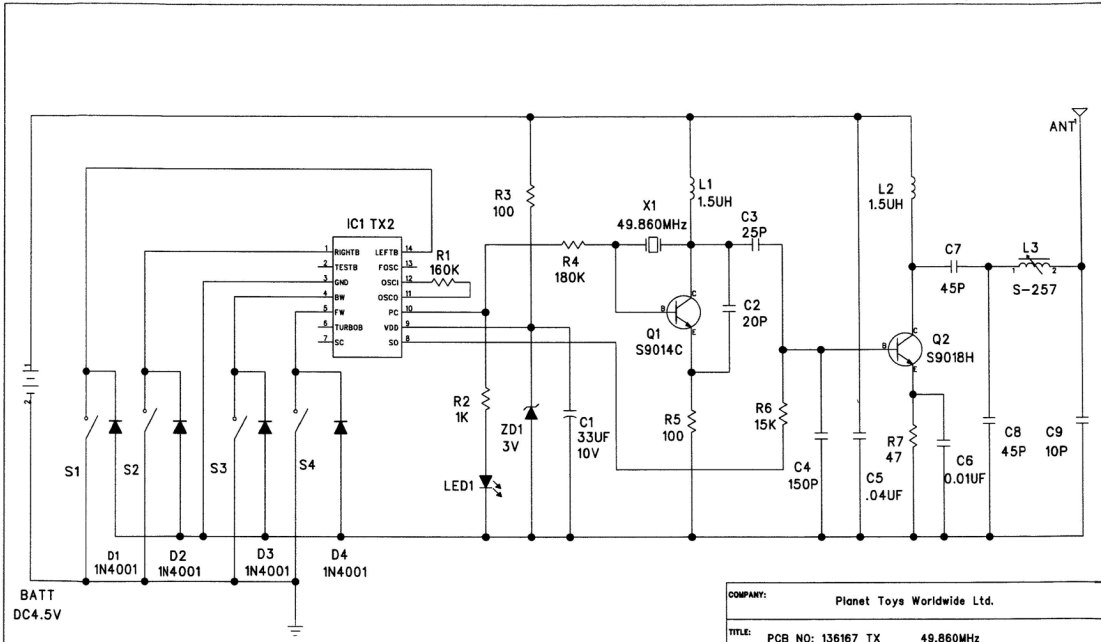

COMPANY: Planet Toys Worldwide Ltd.				
TITLE: PCB NO: 136167 TX 49.860MHz				
DRAWN: XU GMO MING	DATED: 2003-09-02	SCALE:	SIZE: A4	DRAWING NO: 136167	REV: 1
CHECKED:	DATED:				
QUALITY CONTROL:	DATED:				
RELEASED:	DATED:	NO SCH-		SHEET: 1 OF 1	