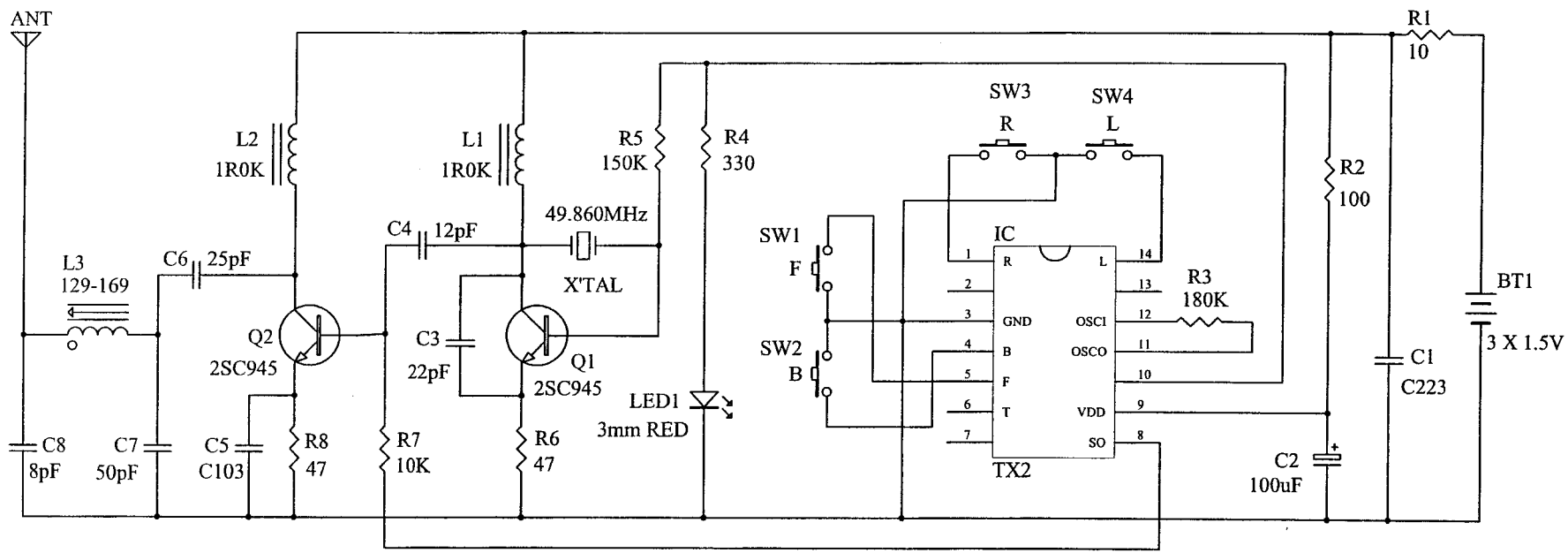

HERALD METAL & PLASTIC WORKS LTD.

PLANET TOYS #3023 (49MHZ) TRANSMITTER CIRCUIT DIAGRAM

HERALD METAL & PLASTIC WORKS LTD. 興利五金塑膠廠			
Title	**PLANET TOYS Mini R/C CAR (TRANSMITTER)**		
Size A4	Number 3023T (49MHZ)		Revision 3
Date: 11-Nov-2002		Sheet of	
File: A:\C3023-49T(3).DDB		Drawn By:	C.W.LAM (林志雲)