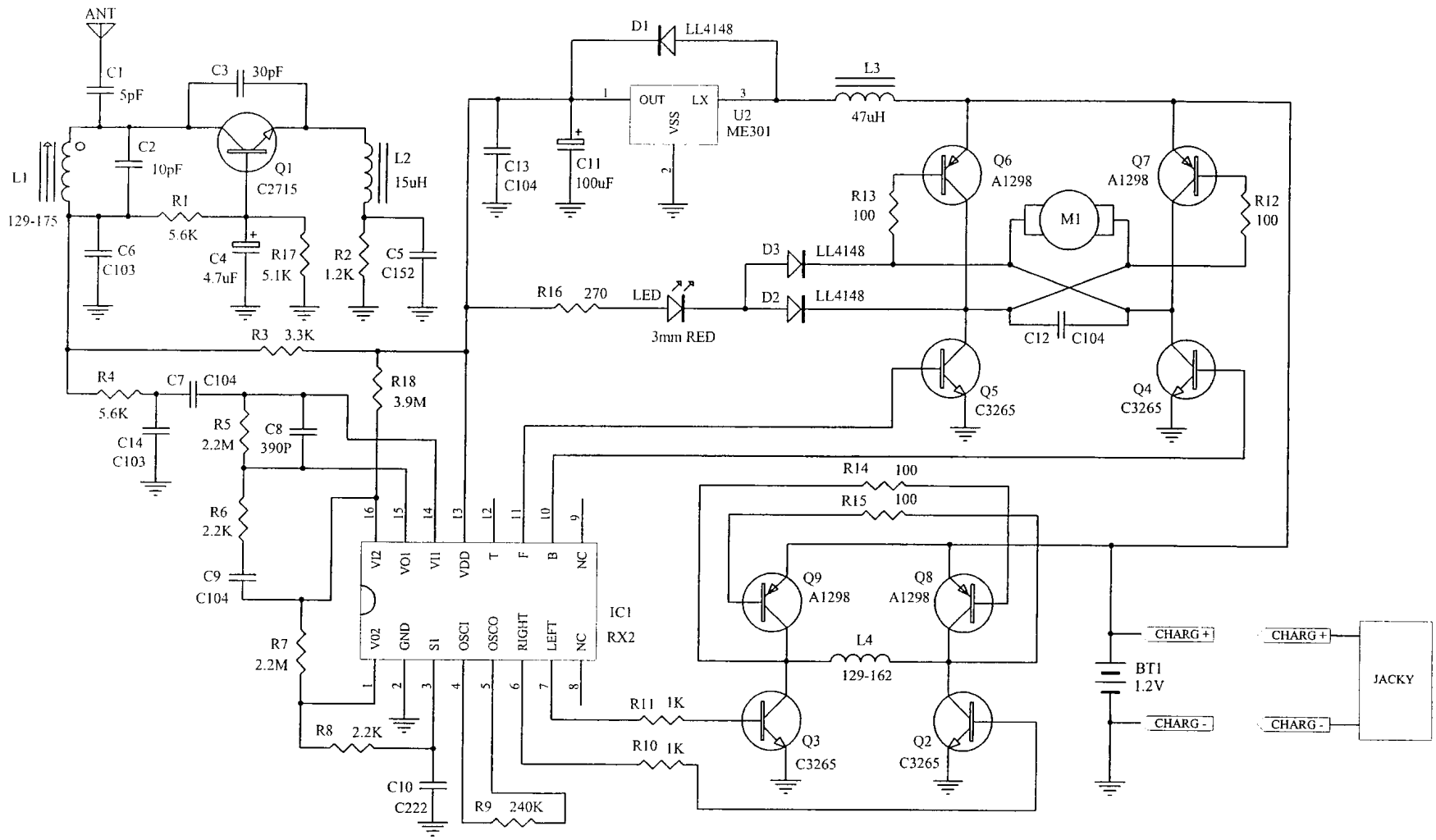

HERALD METAL & PLASTIC WORKS LTD.

PLANET TOYS #3023 (49MHZ) RECEIVER CIRCUIT DIAGRAM

HERALD METAL & PLASTIC WORKS LTD. 興利五金塑膠廠		
Title	**PLANET TOYS Mini R/C CAR (RECEIVER)**	
Size A4	Number 3023R(49MHZ)	Revision 3
Date: 11-Nov-2002		Sheet of
File: A:\C3023-49R(3).DDB		Drawn By: C.W.LAM (林志雲)