Mini RC – Controller

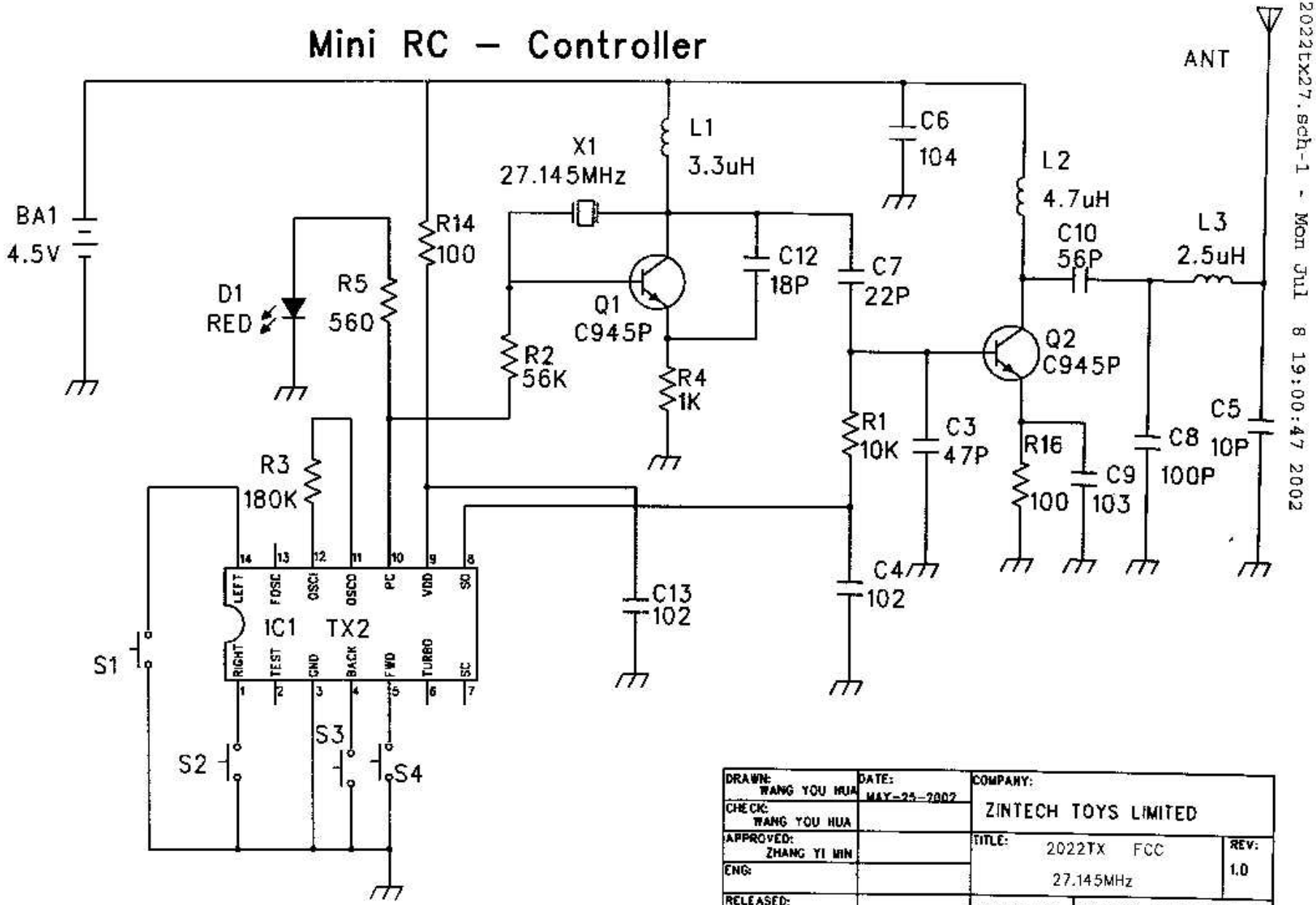

DRAWN: WANG YOU HUA	DATE: MAY-25-2002	COMPANY: ZINTECH TOYS LIMITED	
CHECK: WANG YOU HUA			
APPROVED: ZHANG YI MIN		TITLE: 2022TX FCC 27.145MHz	REV: 1.0
ENG:			
RELEASED:		SCALE: 2:1	DWG NO. DZ01-002001-01