Easy PDF Copyright © 1998,2003 Visage Software
This document was created with FREE version of Easy PDF.Please visit http://www.visagesoft.com for more details
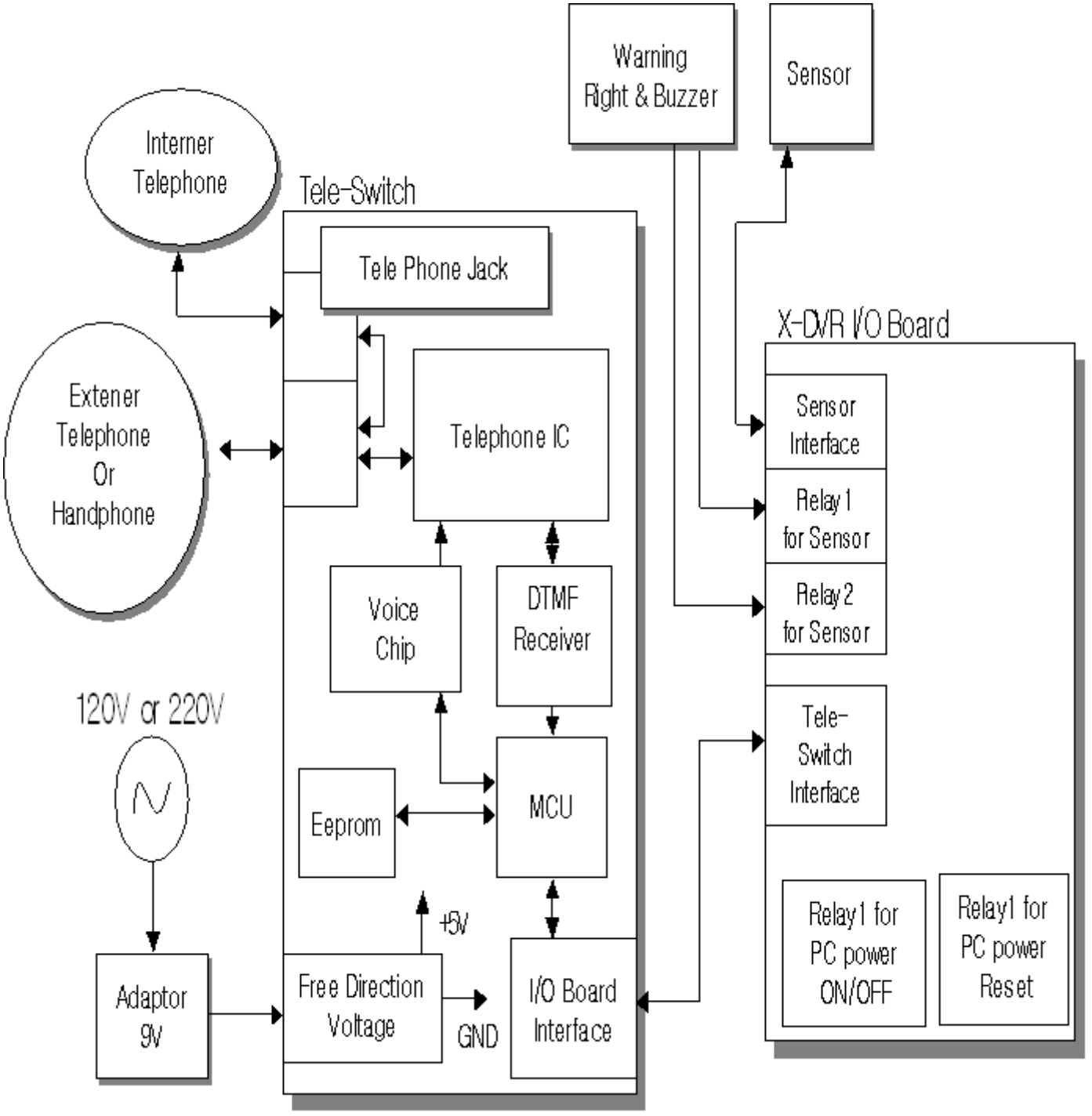
Block diagram