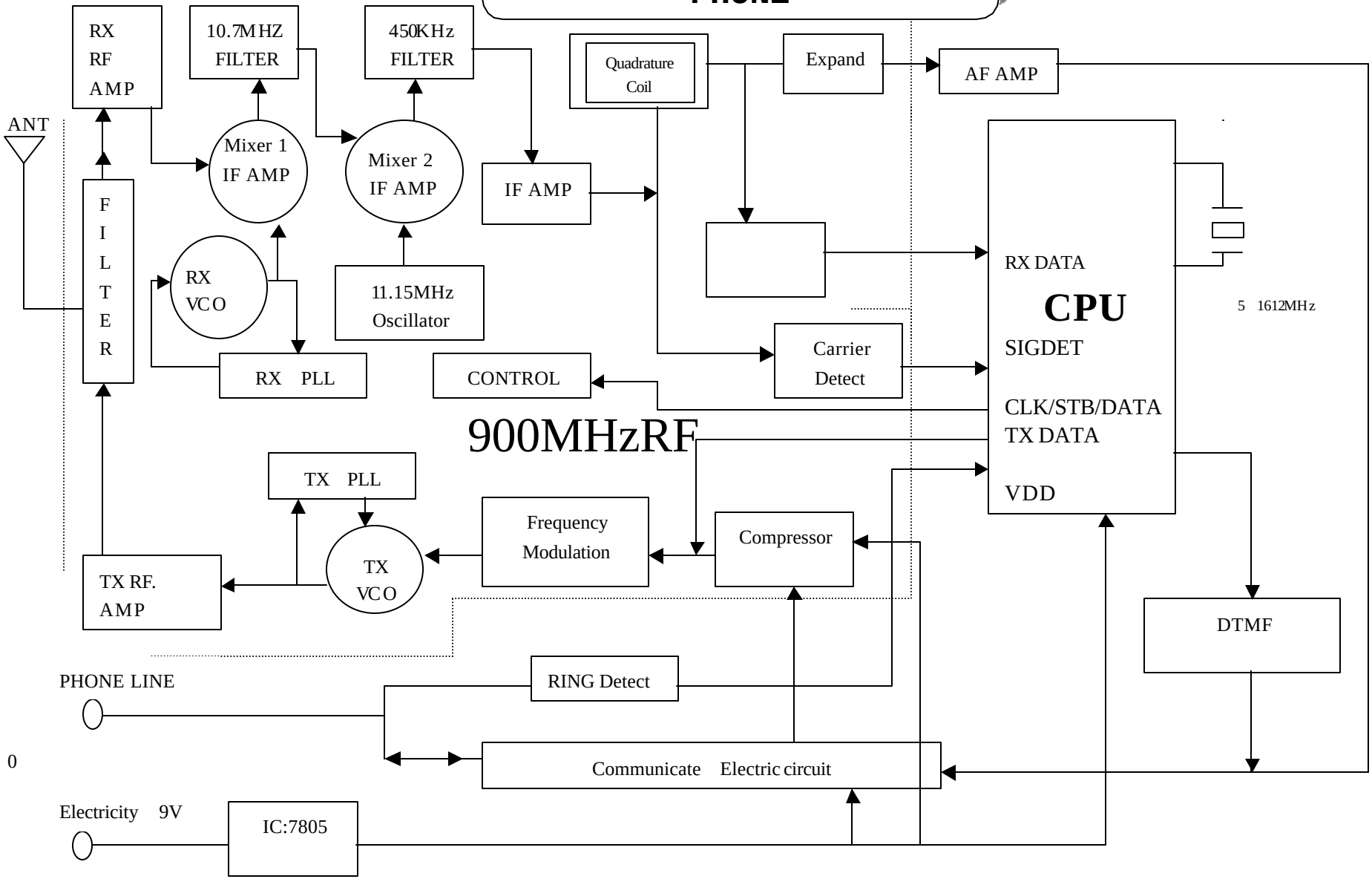NTP-6211B CORDLESS PHONE