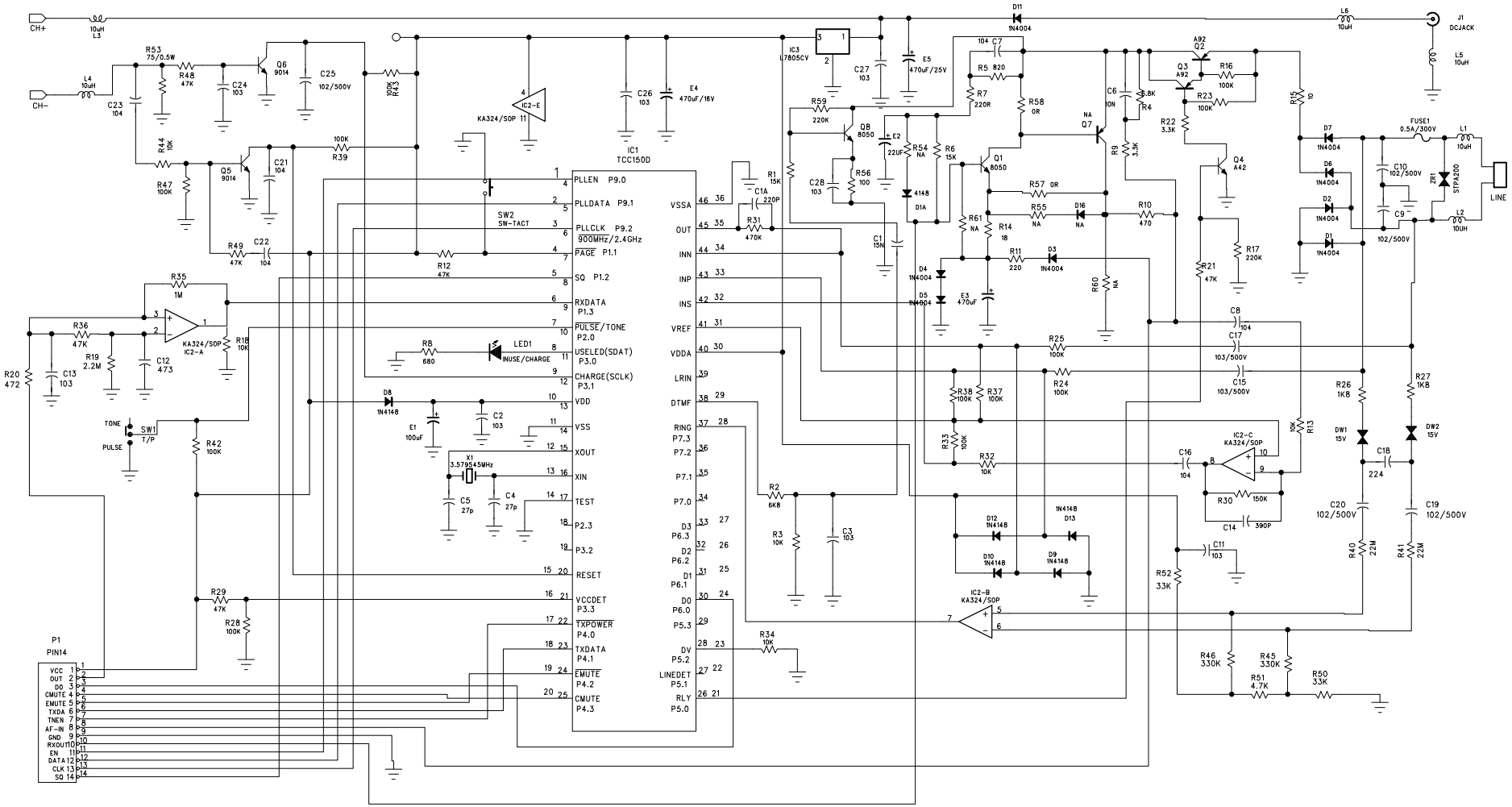

NEWCONT ELE.CO.,LTD			
DESIGN	DRAWING	CHECKED	APPROVED
TITLE :	6348 BASE SCHEMATIC		
SIZE:	NJ6348-02-01		REV:A/2
DATE: 2004-01-15		SHEET: 1 OF 1	