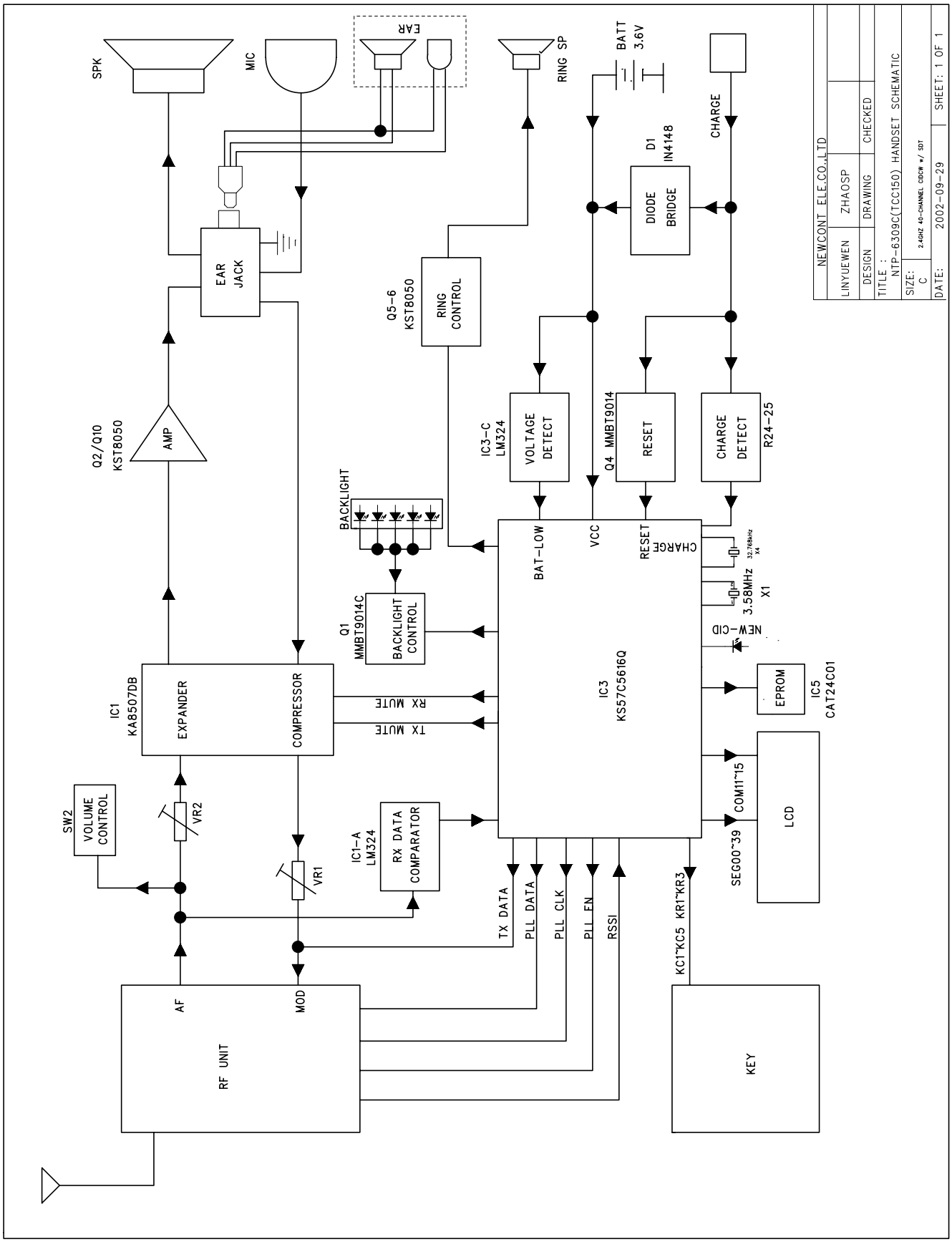
SPK
MIC
EAR
RING SP
BATT
3.6V
CHARGE
D1
IN4148
DIODE
BRIDGE
EAR
JACK
Q5-6
KST8050
RING
CONTROL
Q2/Q10
KST8050
AMP
IC3-C
LM324
VOLTAGE
DETECT
Q4 MMBT9014
RESET
CHARGE
DETECT
R24-25
BACKLIGHT
BAT-LOW
VCC
RESET
CHARGE
32.768kHz
X4
3.58MHz
X1
Q1
MMBT9014C
BACKLIGHT
CONTROL
NEW-CID
IC1
KA8507DB
EXPANDER
COMPRESSOR
RX MUTE
TX MUTE
IC3
KS57C5616Q
EPROM
IC5
CAT24C01
SW2
VOLUME
CONTROL
VR2
VR1
IC1-A
LM324
RX DATA
COMPARATOR
COM11~15
SEG00~39
LCD
TX DATA
PLL DATA
PLL CLK
PLL EN
RSSI
KC1~KC5
KR1~KR3
AF
MOD
RF UNIT
KEY
NEWCONT ELE.CO.,LTD
LINYUEWEN
ZHAOSP
DESIGN
DRAWING
CHECKED
TITLE :
NTP-6309C(TCC150) HANDSET SCHEMATIC
SIZE:
C
2.4GHZ 40-CHANNEL CDCW w/ SDT
DATE:
2002-09-29
SHEET: 1 OF 1