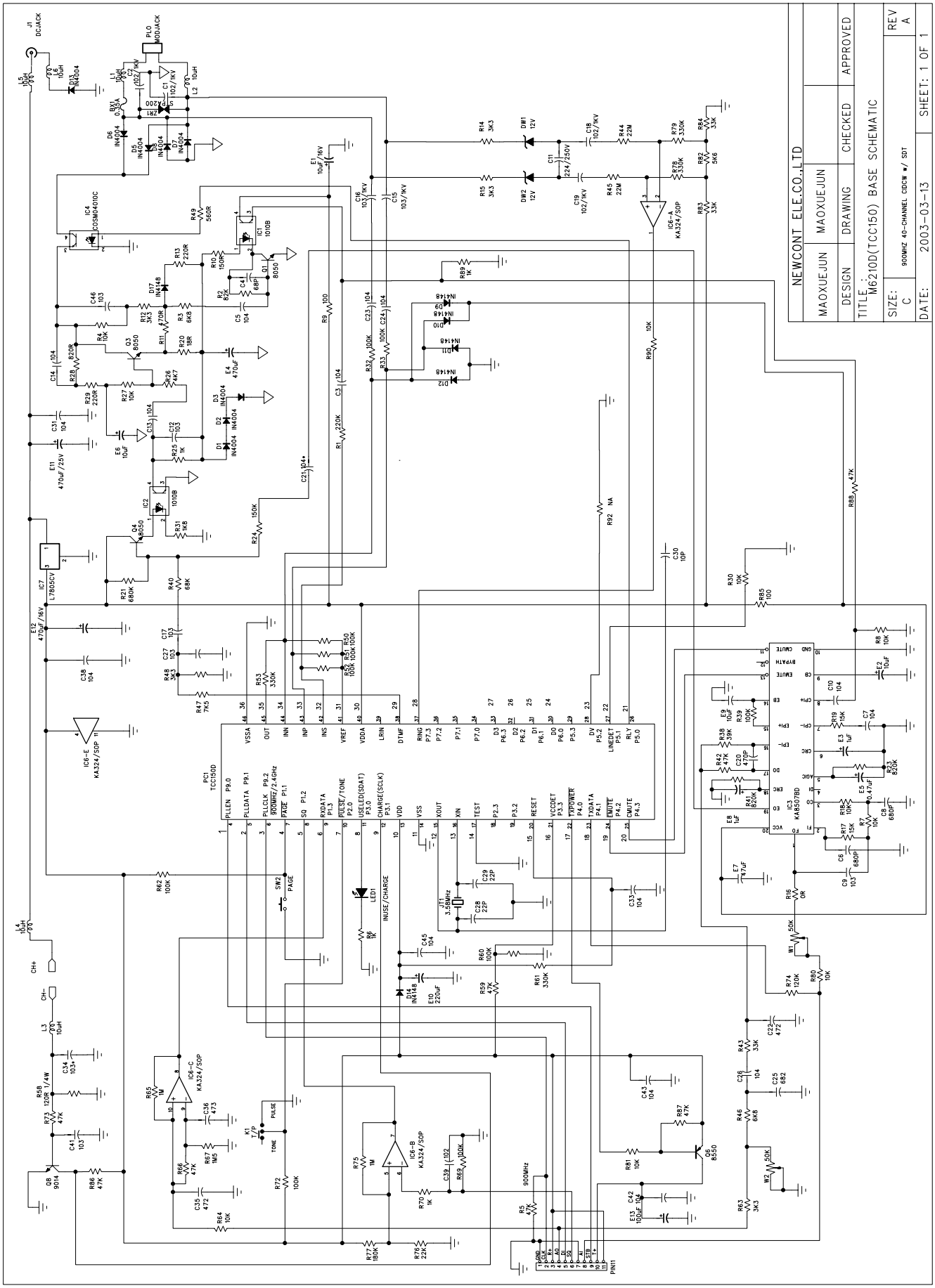
NEWCONT ELE.CO.,LTD
MAOXUEJUN
MAOXUEJUN
DESIGN
DRAWING
CHECKED
APPROVED
TITLE: M6210D(TCC150) BASE SCHEMATIC
SIZE: C
900MHZ 40-CHANNEL CBCW w/ SDT
REV A
DATE: 2003-03-13
SHEET: 1 OF 1