Appendix E. Block Diagram

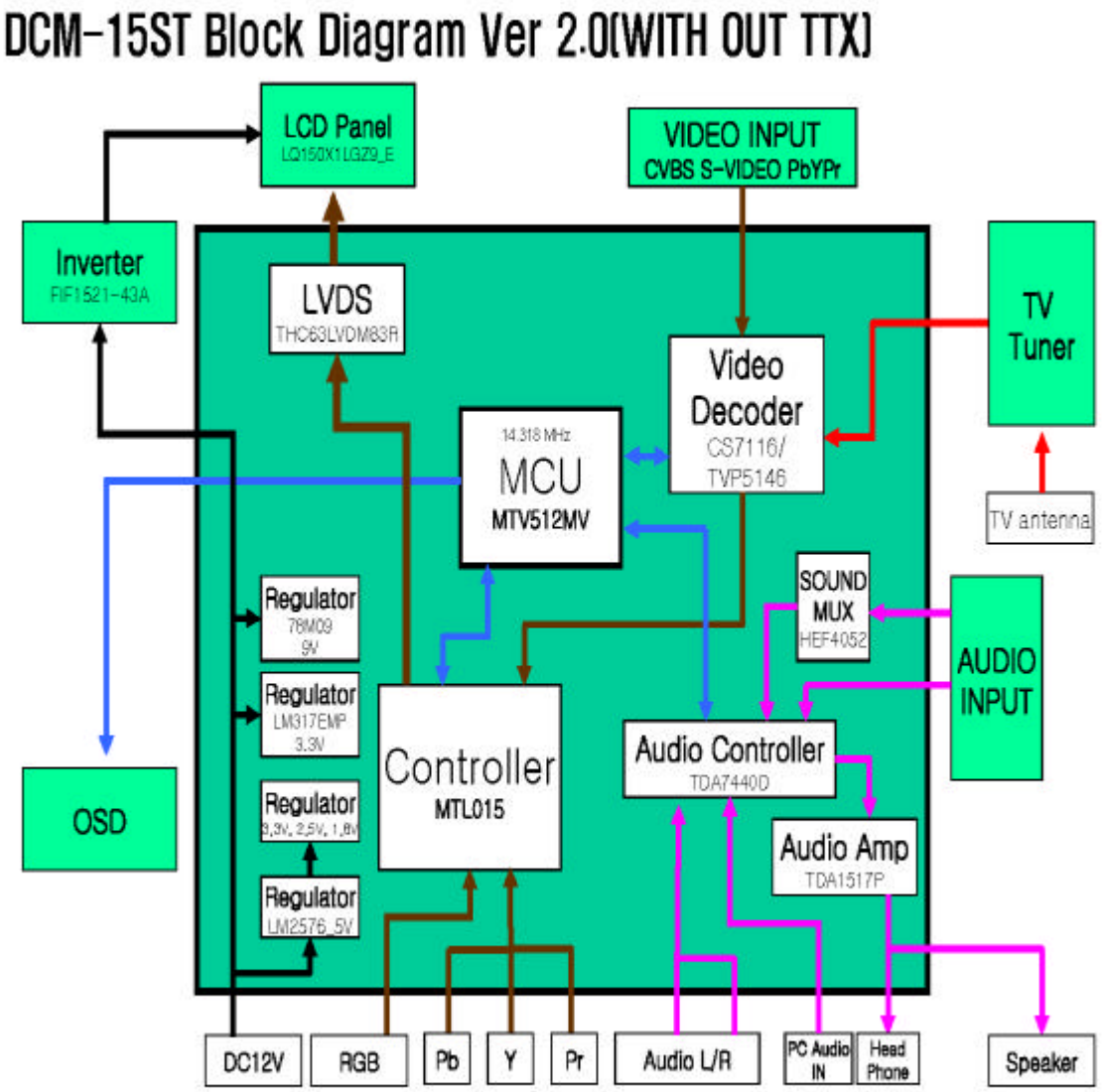

Head Office: # 371-51 Kasan-Dong, Keumcheon-ku, Seoul, 153-803, Korea / Tel : 82-2-858-0786, Fax : 82-2-858-0788
EMC Lab: #584 Sangwhal-ri, Kanam-myon, Yoju-kun, Kyounggi-do, 469-885, Korea /Tel:82-31-885-0072, Fax:82-31-885-0074