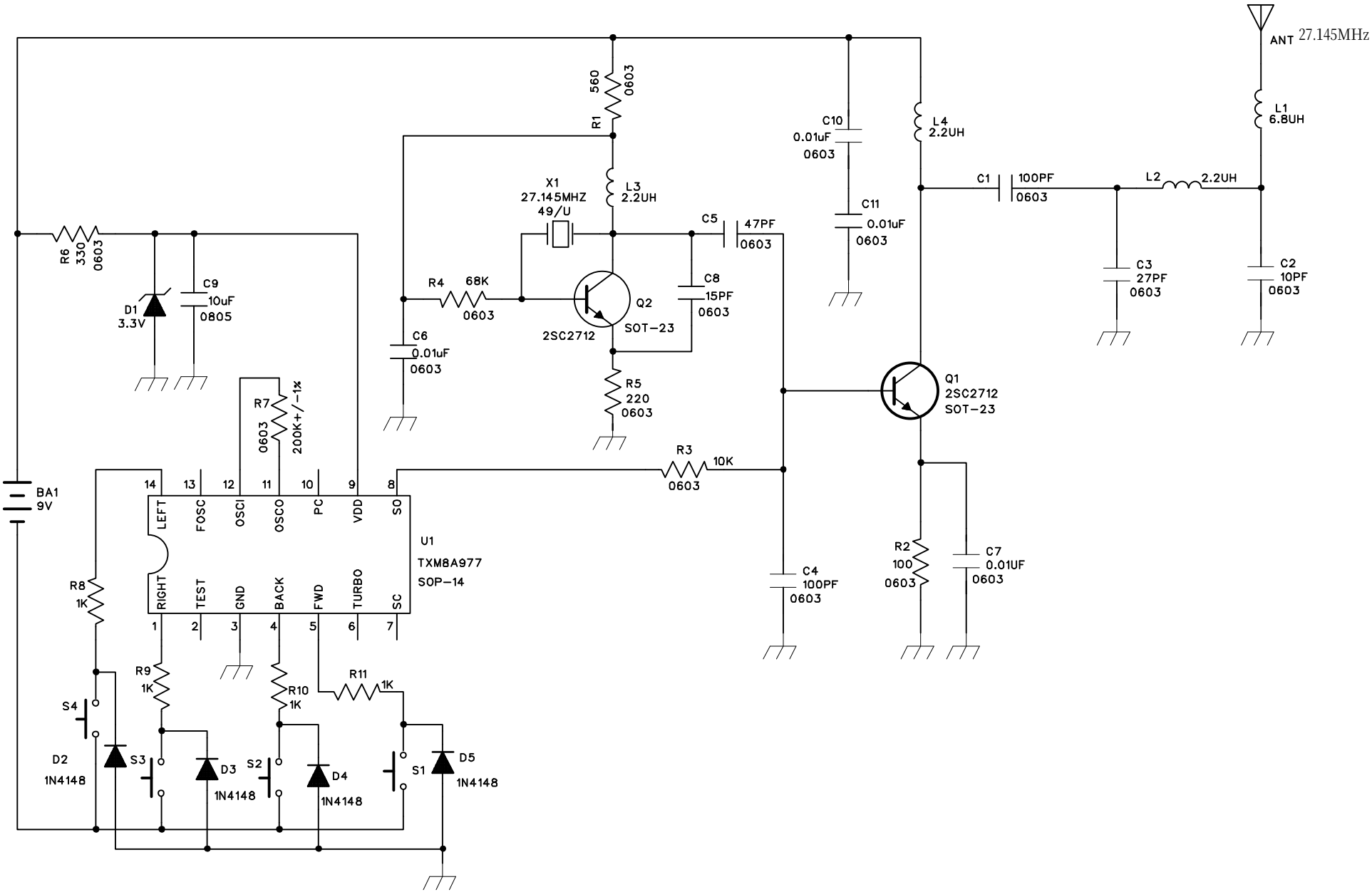
ANT 27.145MHz
L1
6.8UH
L2
2.2UH
C1
100PF
0603
C2
10PF
0603
C3
27PF
0603
L4
2.2UH
C10
0.01uF
0603
C11
0.01uF
0603
560
0603
R1
L3
2.2UH
X1
27.145MHZ
49/U
C5
47PF
0603
C8
15PF
0603
Q2
SOT-23
2SC2712
R4
68K
0603
C6
0.01uF
0603
R5
220
0603
Q1
2SC2712
SOT-23
R3
10K
0603
R2
100
0603
C7
0.01UF
0603
C4
100PF
0603
R6
330
0603
D1
3.3V
C9
10uF
0805
R7
200K+/-1%
0603
BA1
9V
U1
TXM8A977
SOP-14
LEFT
FOSC
OSCI
OSCO
PC
VDD
SO
RIGHT
TEST
GND
BACK
FWD
TURBO
SC
R8
1K
R9
1K
R10
1K
R11
1K
S4
D2
1N4148
S3
D3
1N4148
S2
D4
1N4148
S1
D5
1N4148