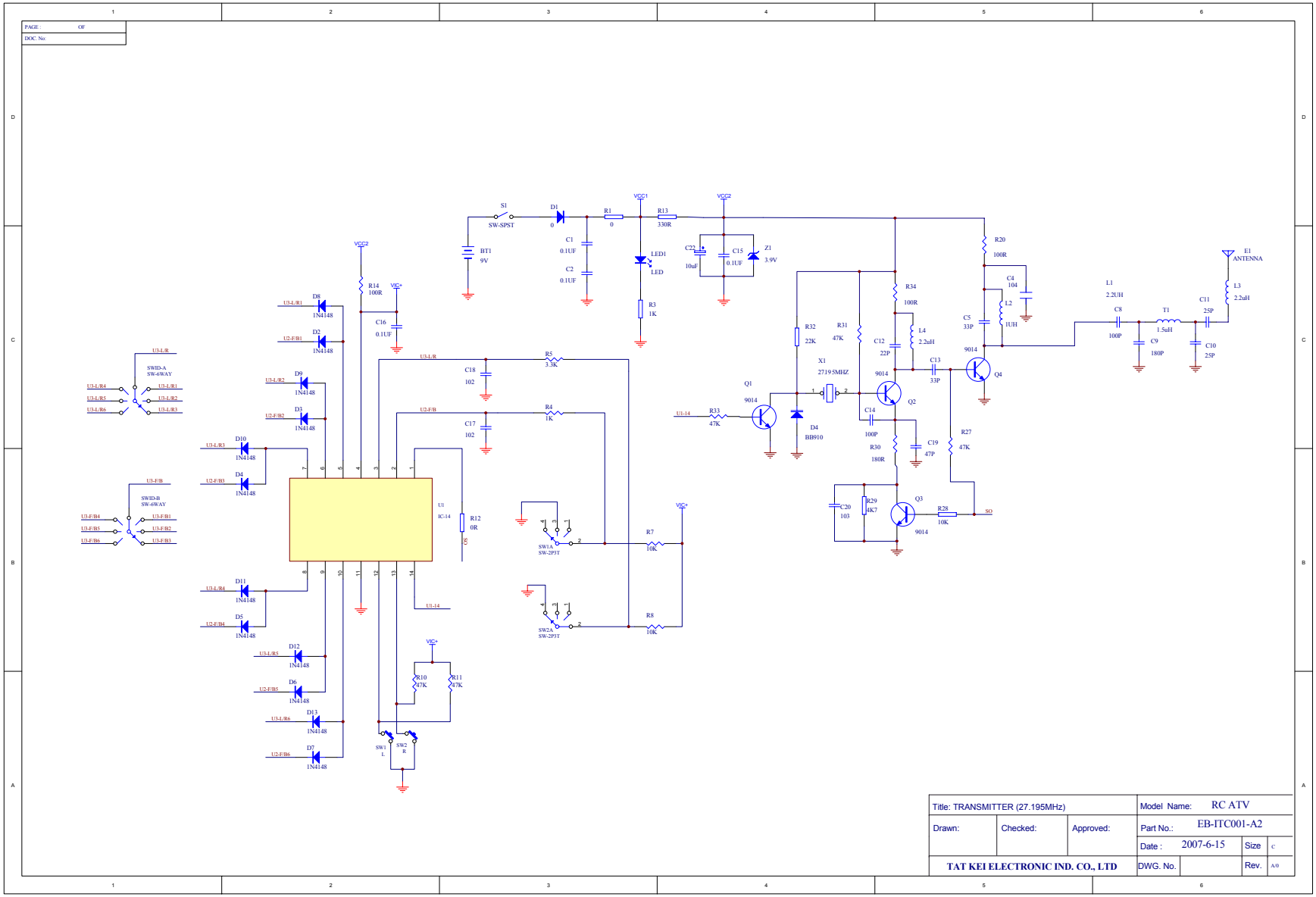

Title: TRANSMITTER (27.195MHz)			Model Name:	RC ATV
Drawn:	Checked:	Approved:	Part No.:	EB-ITC001-A2
			Date : 2007-6-15	Size C
TAT KEI ELECTRONIC IND. CO., LTD			DWG. No.	Rev. A/0