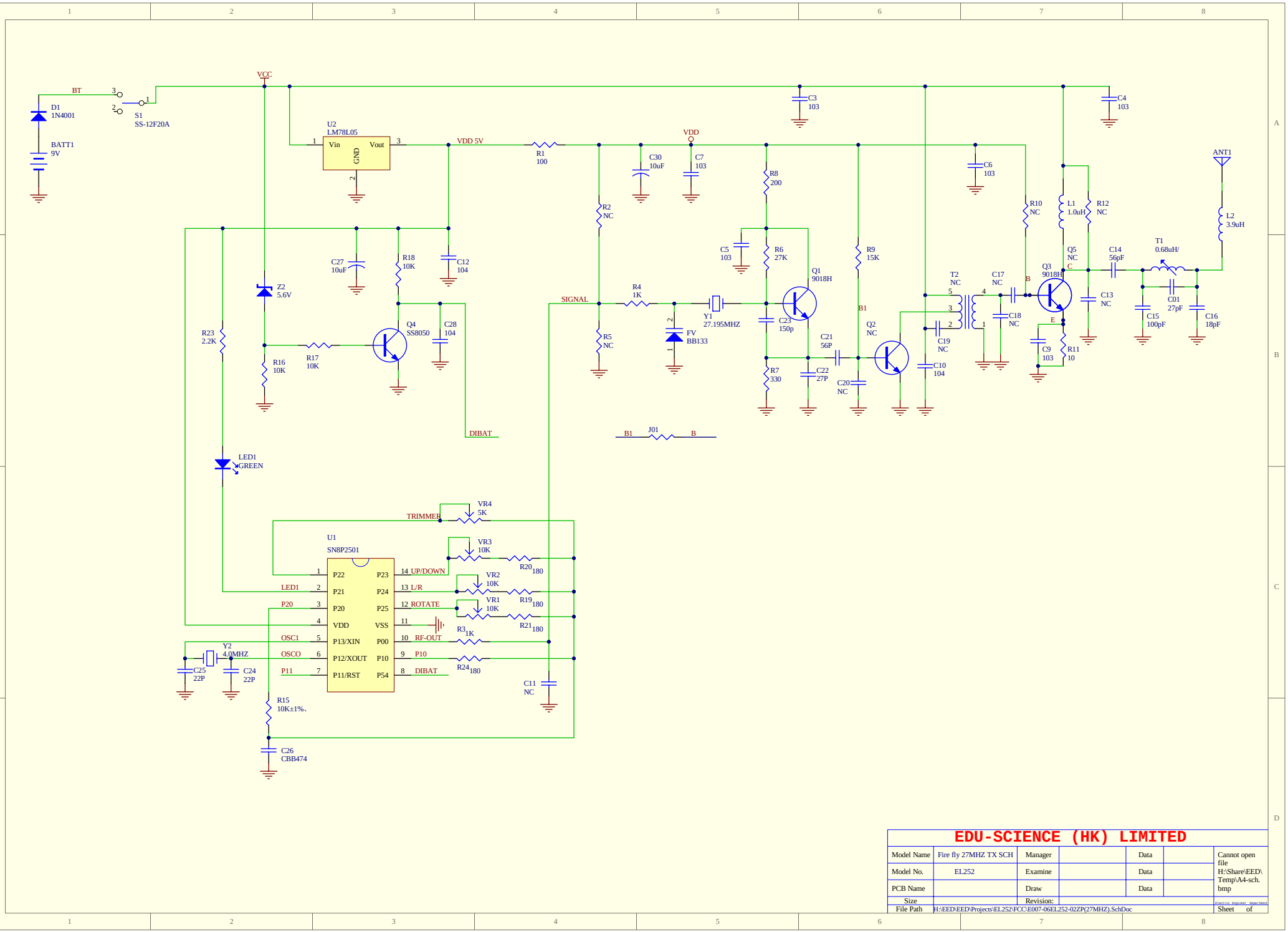

EDU-SCIENCE (HK) LIMITED						
Model Name	Fire fly 27MHZ TX SCH	Manager		Data		Cannot open file H:\Share\EED\Temp\A4-sch.bmp
Model No.	EL252	Examine		Data		
PCB Name		Draw		Data		
Size		Revision:				
File Path	H:\EED\EED\Projects\EL252\FCC\E007-06EL252-02ZP(27MHZ).SchDoc					Sheet of