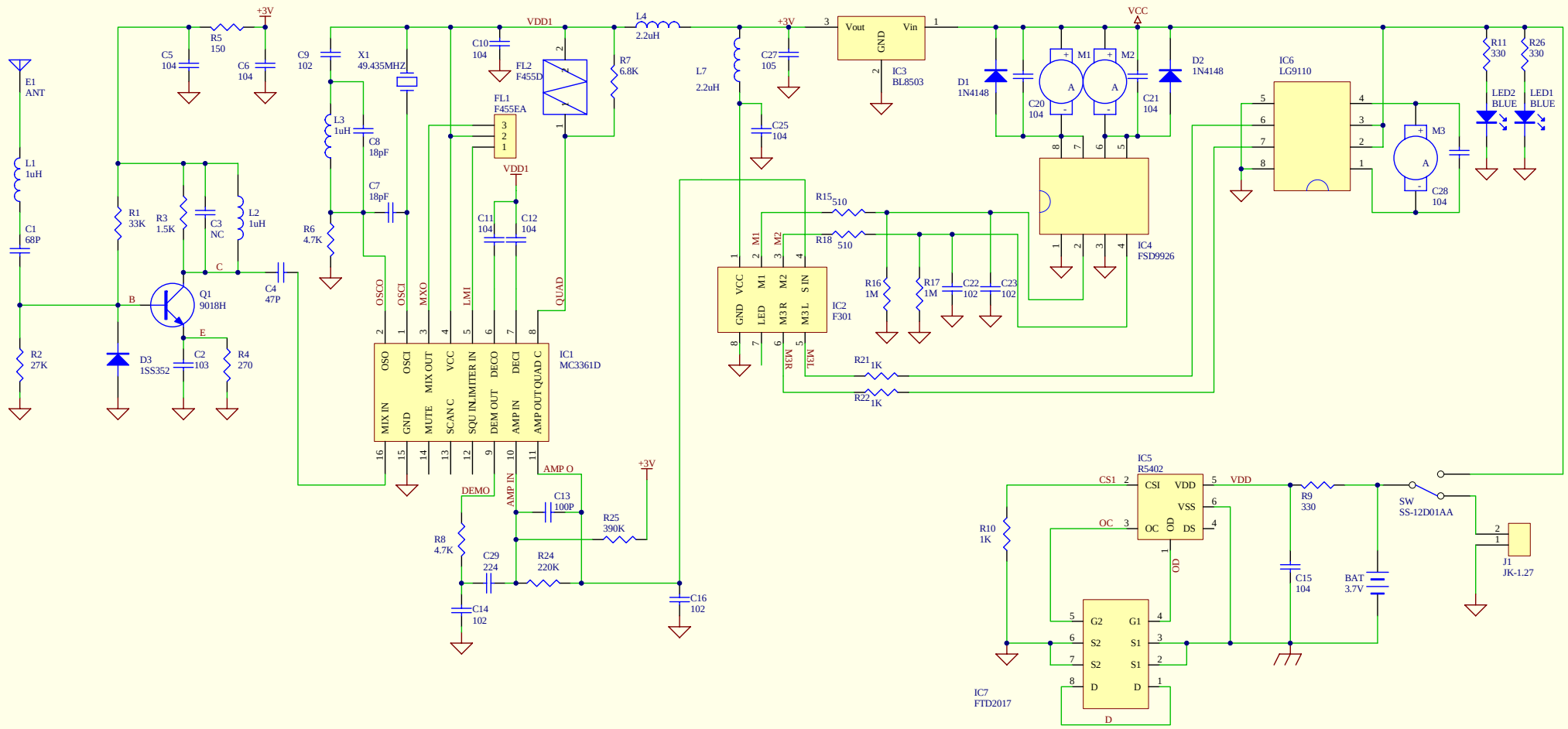

EDU-SCIENCE (HK) LIMITED						
Model Name	Fire fly 49MHZ RX SCH	Manager		Data		Cannot open file H:\Share\EED\Temp\A4-sch.bmp
Model No.	EL252	Examine		Data		
PCB Name		Draw		Data		
Size		Revision:				Electric Engineer Department
File Path	H:\EED\EED\Projects\EL252\PCB&SCH\E007-01EL252-01XP(49MHZ).SchDoc					Sheet of