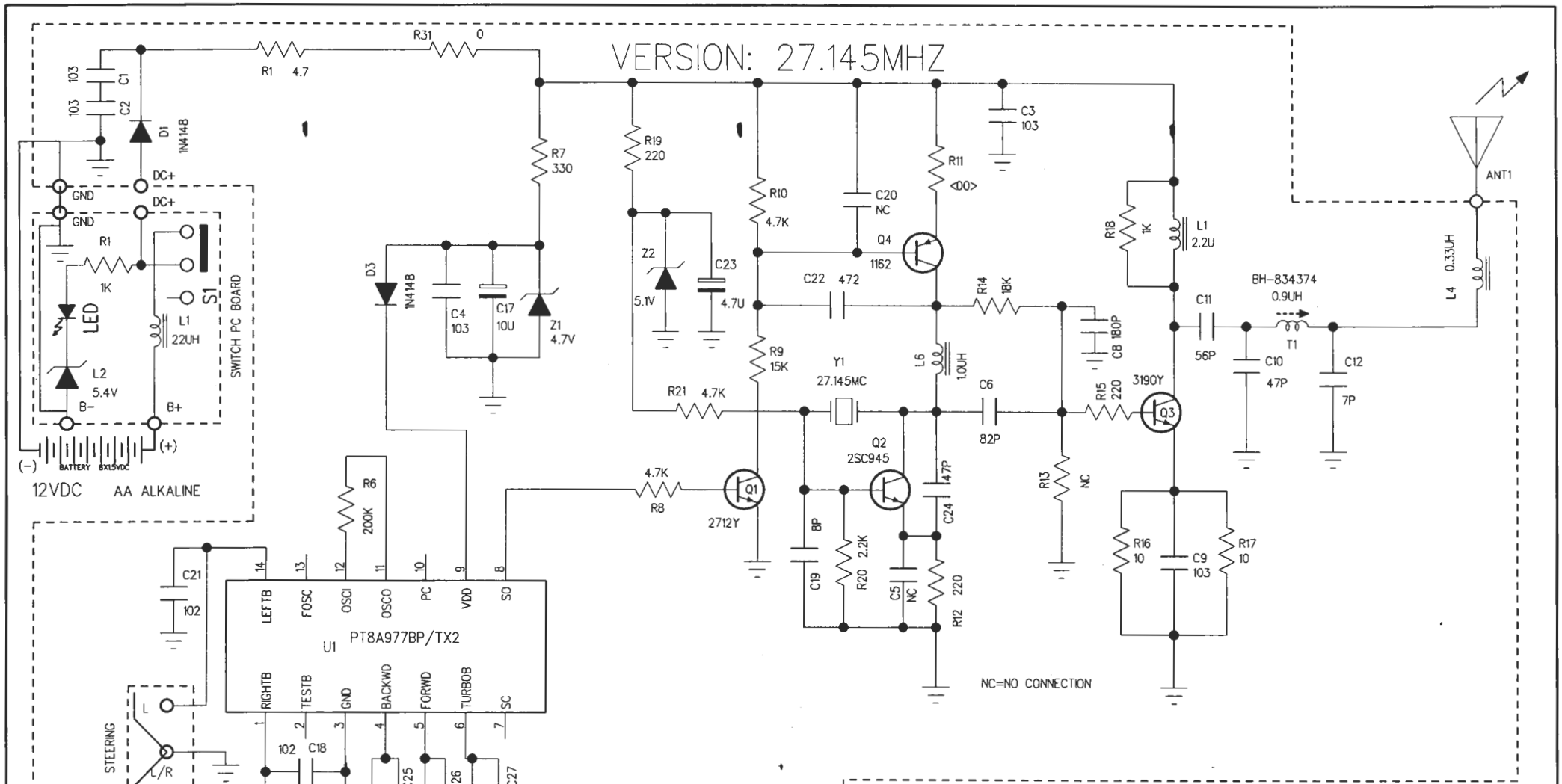

GULF ALIEN AEROPLANE

VERSION: 27.145MHZ

DRAWN: LITTLE	DATE: 15-8-2006	TITLE: SCHEMATIC DIAGRAM TX SECTION		SIZE: A4
CHECKED: huang	DATE: 16-8-2006	MATERIAL: 94HB THICK 1.6mm GOLD PLATE	VER: 1.0	DATE:
APPROVED: YKY	DATE: 17-8-2006	MODEL: GULF ALIEN AEROPLANE	PART NO. 050-481T01-A003	SHEET 1 OF 1

Dynamic industries co. ltd.