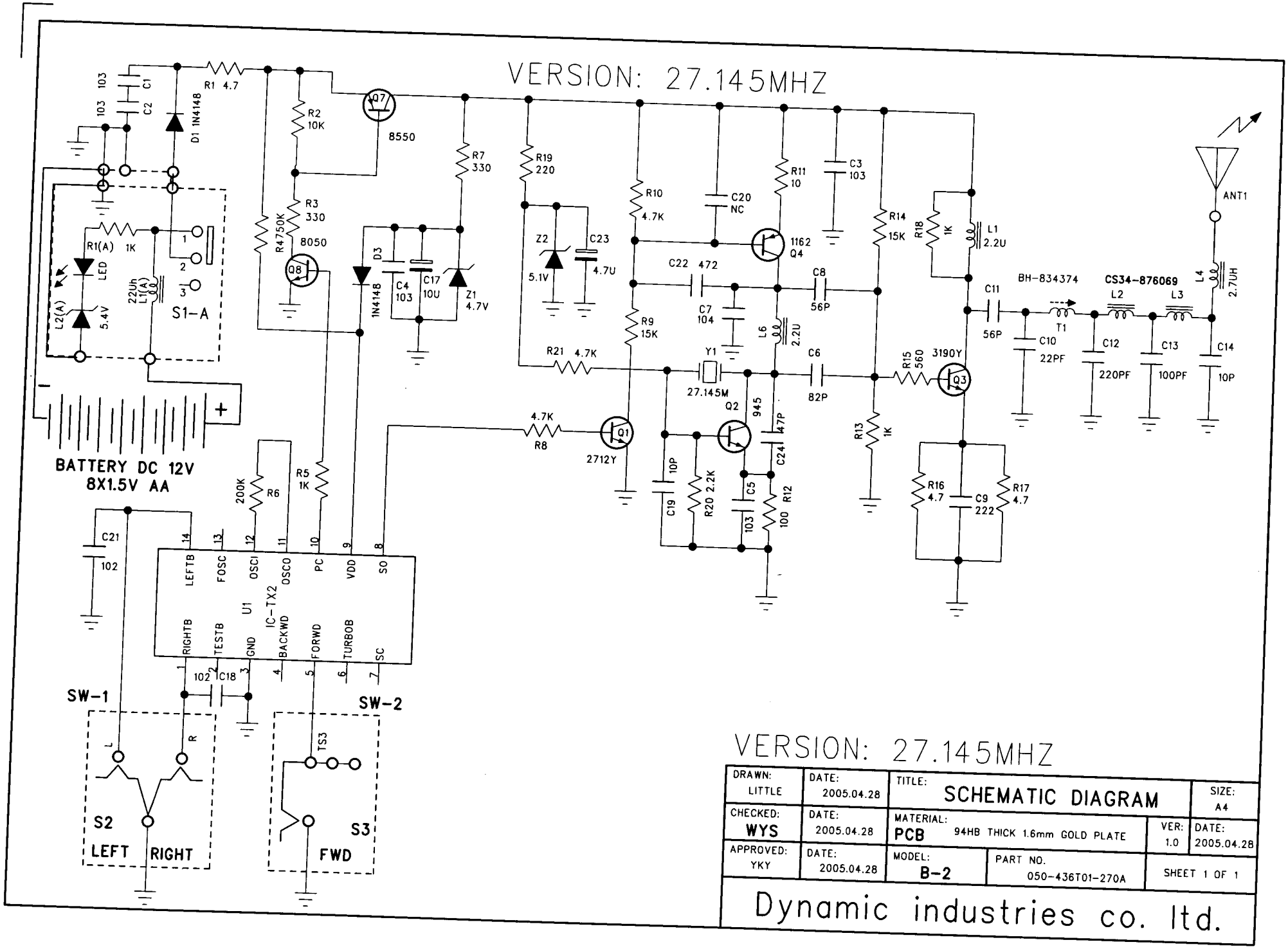

VERSION: 27.145MHZ

DRAWN: LITTLE	DATE: 2005.04.28	TITLE: SCHEMATIC DIAGRAM		SIZE: A4
CHECKED: WYS	DATE: 2005.04.28	MATERIAL: PCB 94HB THICK 1.6mm GOLD PLATE	VER: 1.0	DATE: 2005.04.28
APPROVED: YKY	DATE: 2005.04.28	MODEL: B-2	PART NO. 050-436T01-270A	SHEET 1 OF 1

Dynamic industries co. ltd.