REVISON RECORD			
LTR	ECO NO:	APPROVED:	DATE:

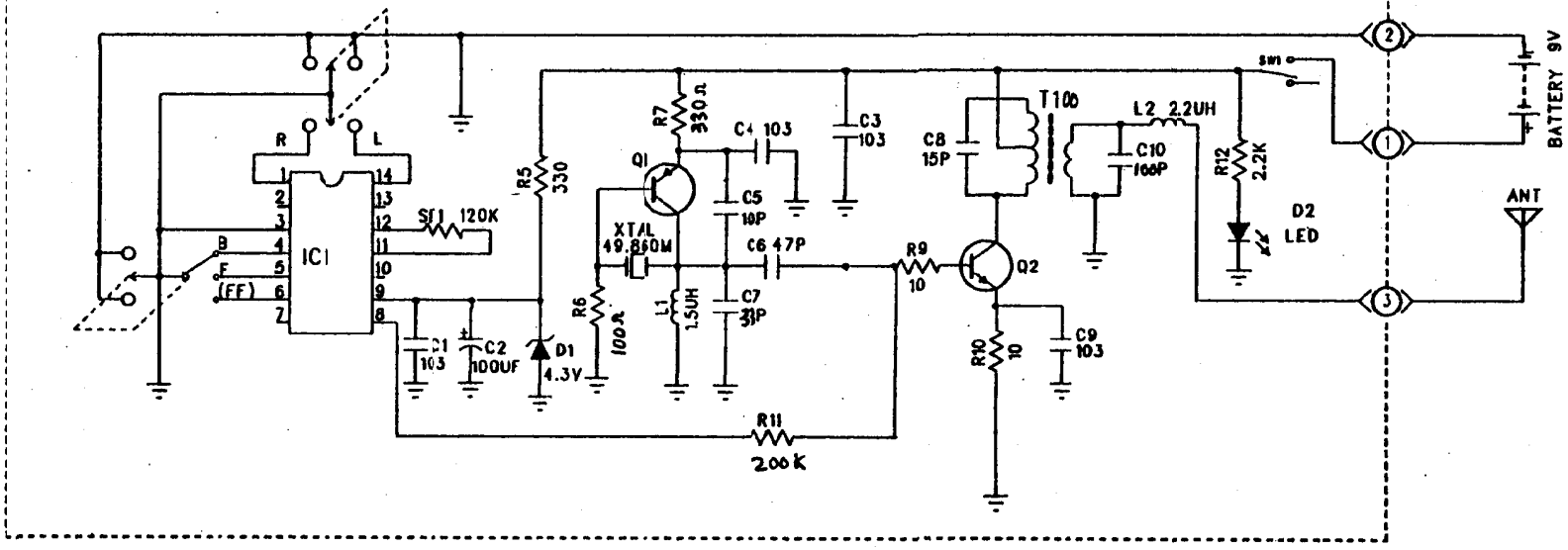

IC1 ---------- TX2 OR TX2C

Q1 ---------- 2SA1015(Y)

Q2/3 ---------- 2SC1815(Y)

D1 ---------- VZ-4.3B

D2 ---------- LED DIAMETRO 5MM RED

DRAWN: G.X.FENG	DATED: 02.08.27
CHECKED:	DATED:
APPROVED:	DATED:
RELEASED:	DATED:

COMPANY: WINTY MANUFACTURING

TITLE: M-13005.TX-49.860MHZ

CODE:	SIZE:	DRAWING NO:	REV:
			0

SCALE: SHEET: OF