Schematics Diagram

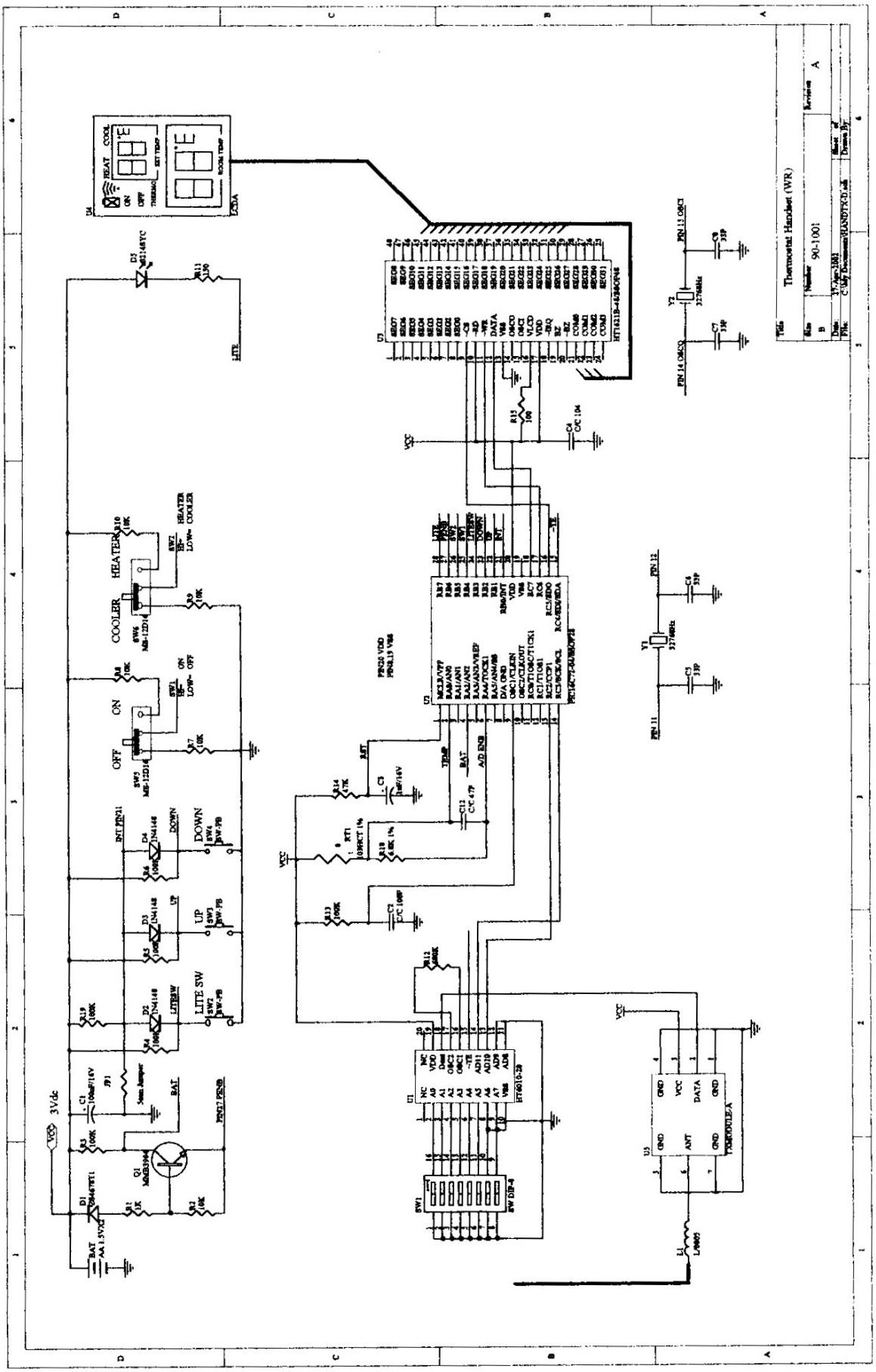

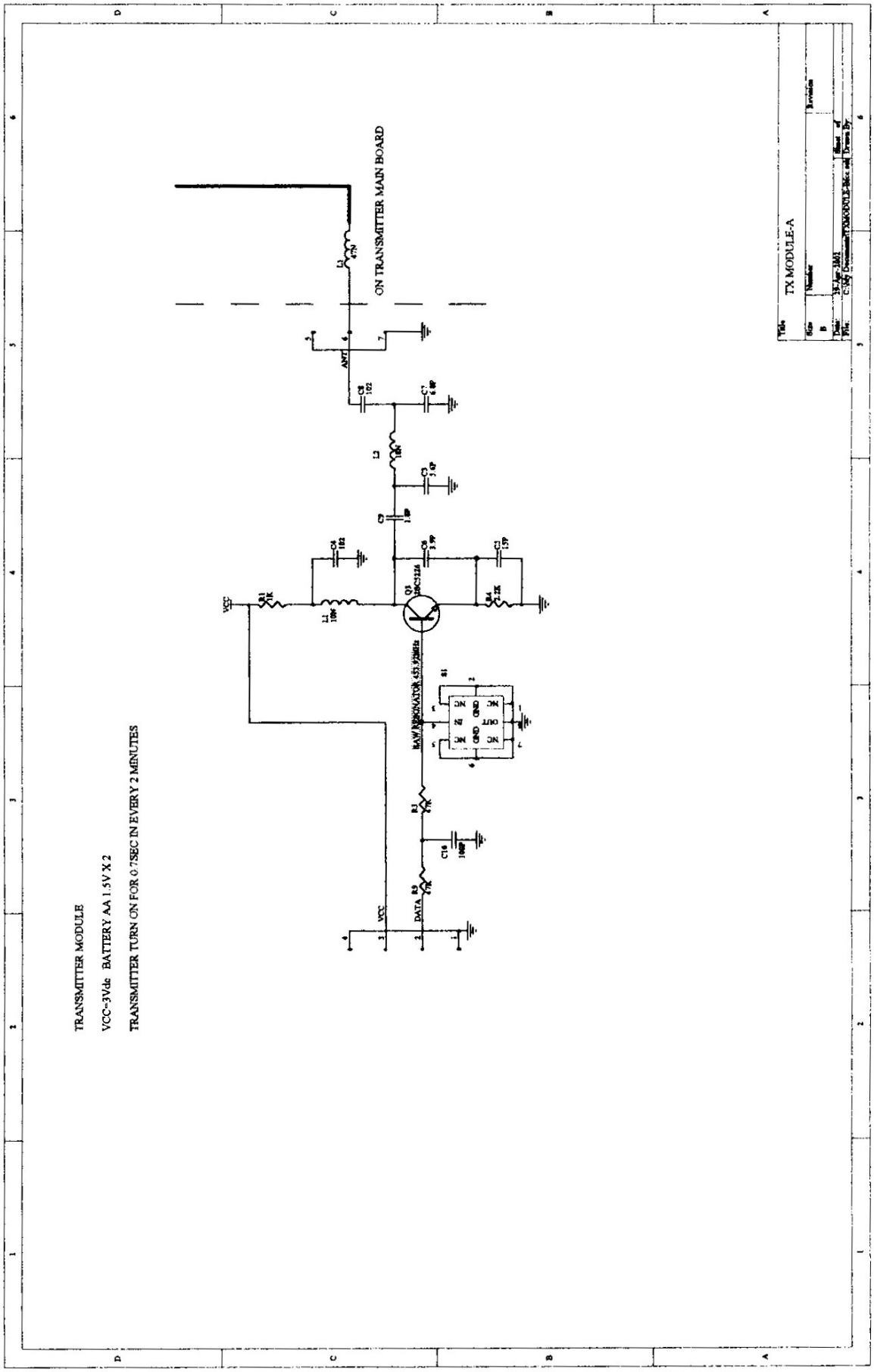
TRANSMITTER MODULE
VCC=3Vdc BATTERY AA 1.5V X 2
TRANSMITTER TURN ON FOR 0.75SEC IN EVERY 2 MINUTES
ON TRANSMITTER MAIN BOARD
TX MODULE-A