ATTACHMENT C.

- BLOCK/CIRCUIT DIAGRAM

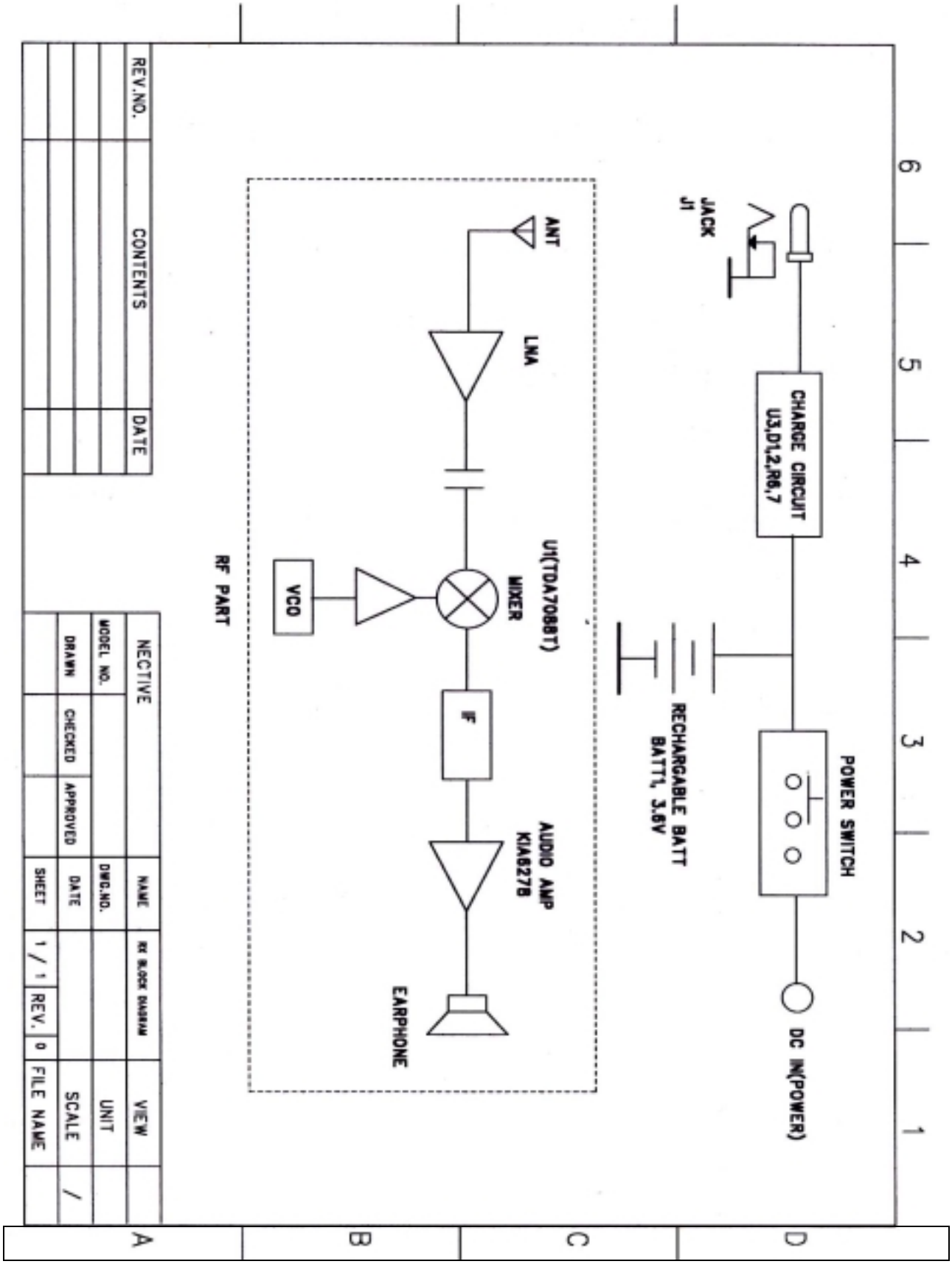
POWER SWITCH
DC IN(POWER)
CHARGE CIRCUIT
U3,D1,2,R6,7
JACK
J1
RECHARGABLE BATT
BATT1, 3.6V
ANT
LNA
U1(TDA7088T)
MIXER
IF
AUDIO AMP
KIA6278
EARPHONE
VCO
RF PART
REV.NO.
CONTENTS
DATE
NECTIVE
NAME
RX BLOCK DIAGRAM
VIEW
MODEL NO.
DWG.NO.
UNIT
DRAWN
CHECKED
APPROVED
DATE
SCALE
/
SHEET
1 / 1
REV.
0
FILE NAME

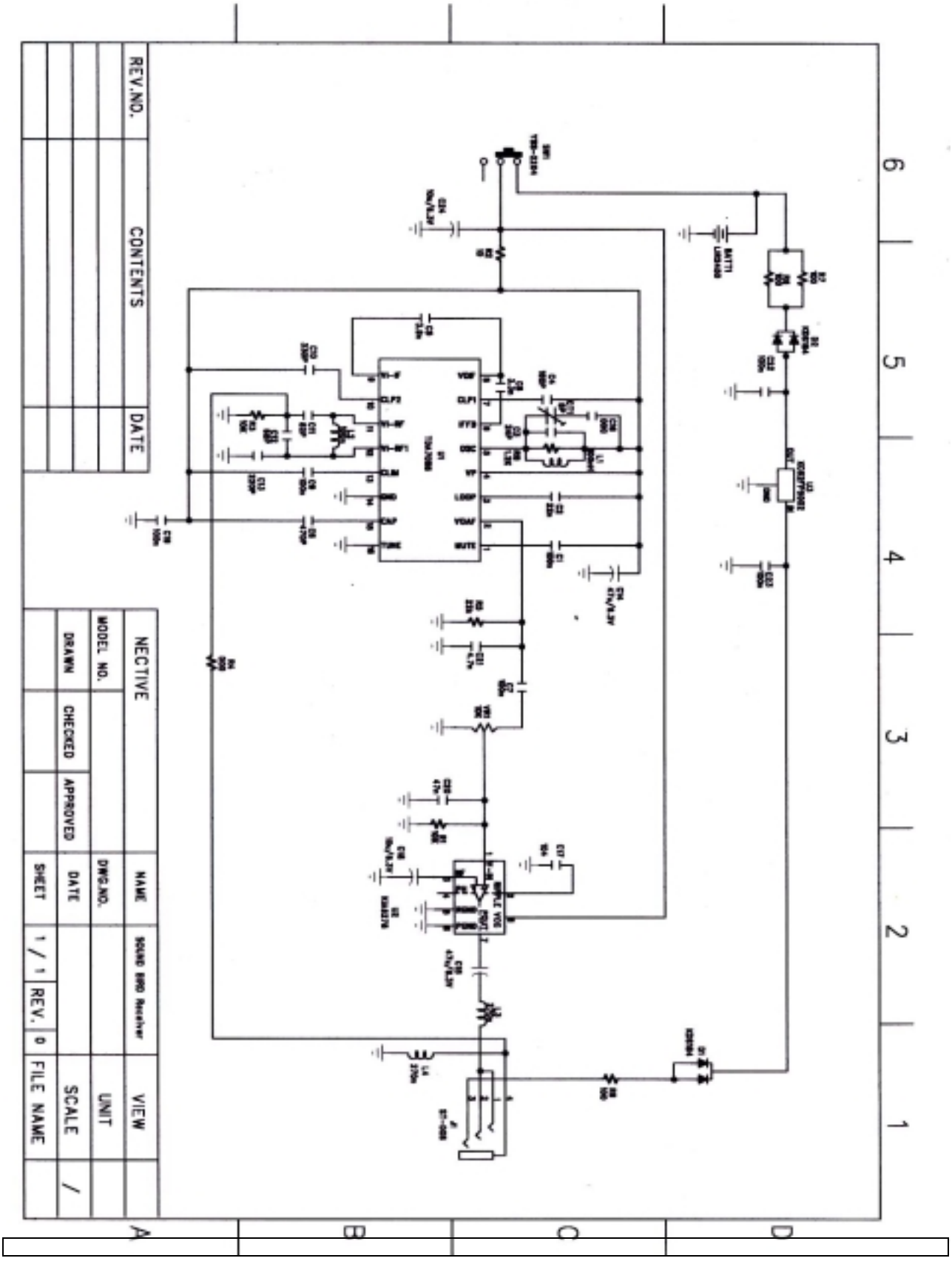
REV.NO.
CONTENTS
DATE
NECTIVE
MODEL NO.
DRAWN
CHECKED
APPROVED
NAME
DWG.NO.
DATE
SHEET
1 / 1
REV.
0
FILE NAME
SOUND 8890 Receiver
VIEW
UNIT
SCALE
/