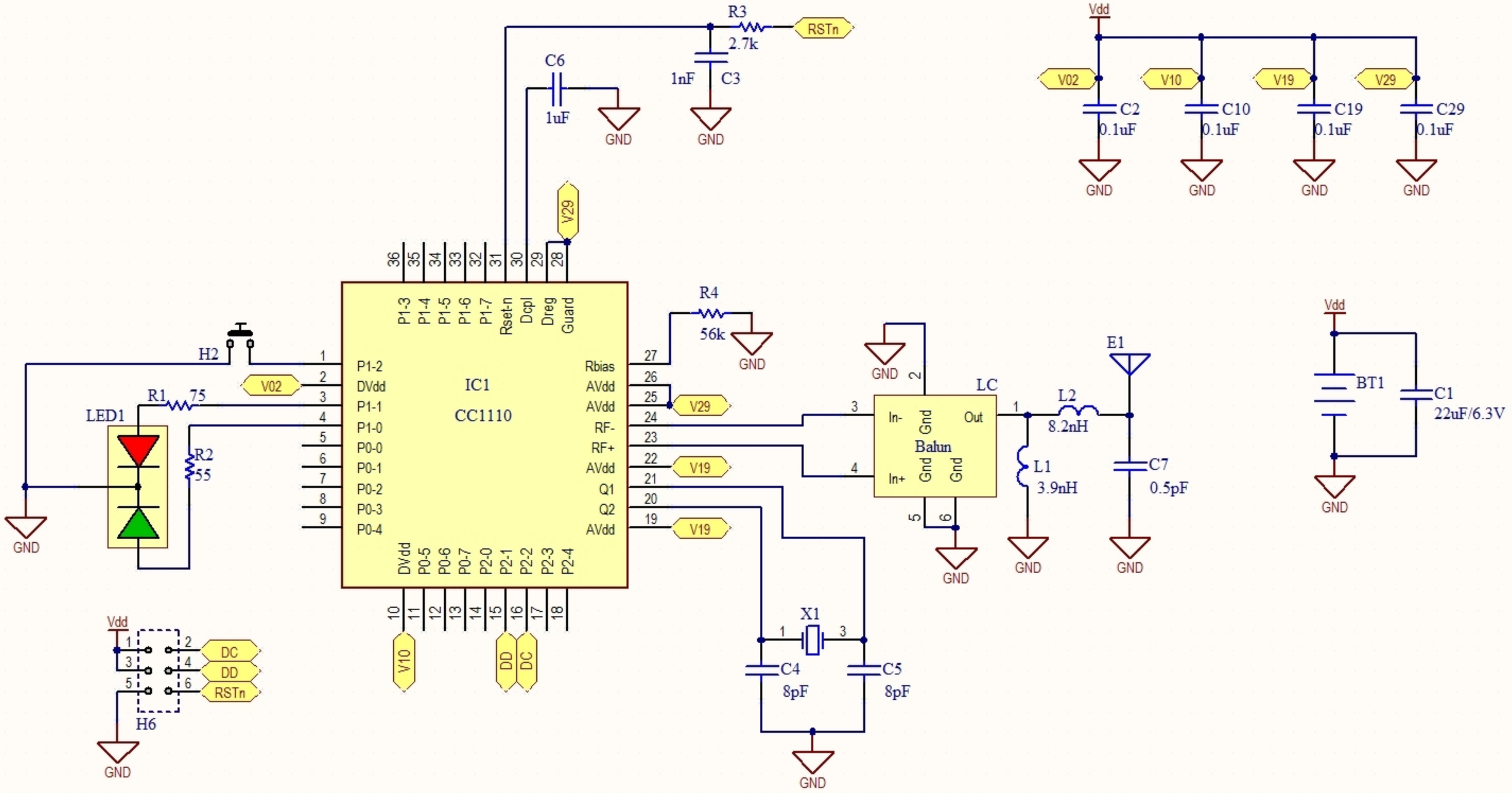

reelyActive RA-T411-02 schematic diagram