APPENDIX D

: BLOCK DIAGRAM
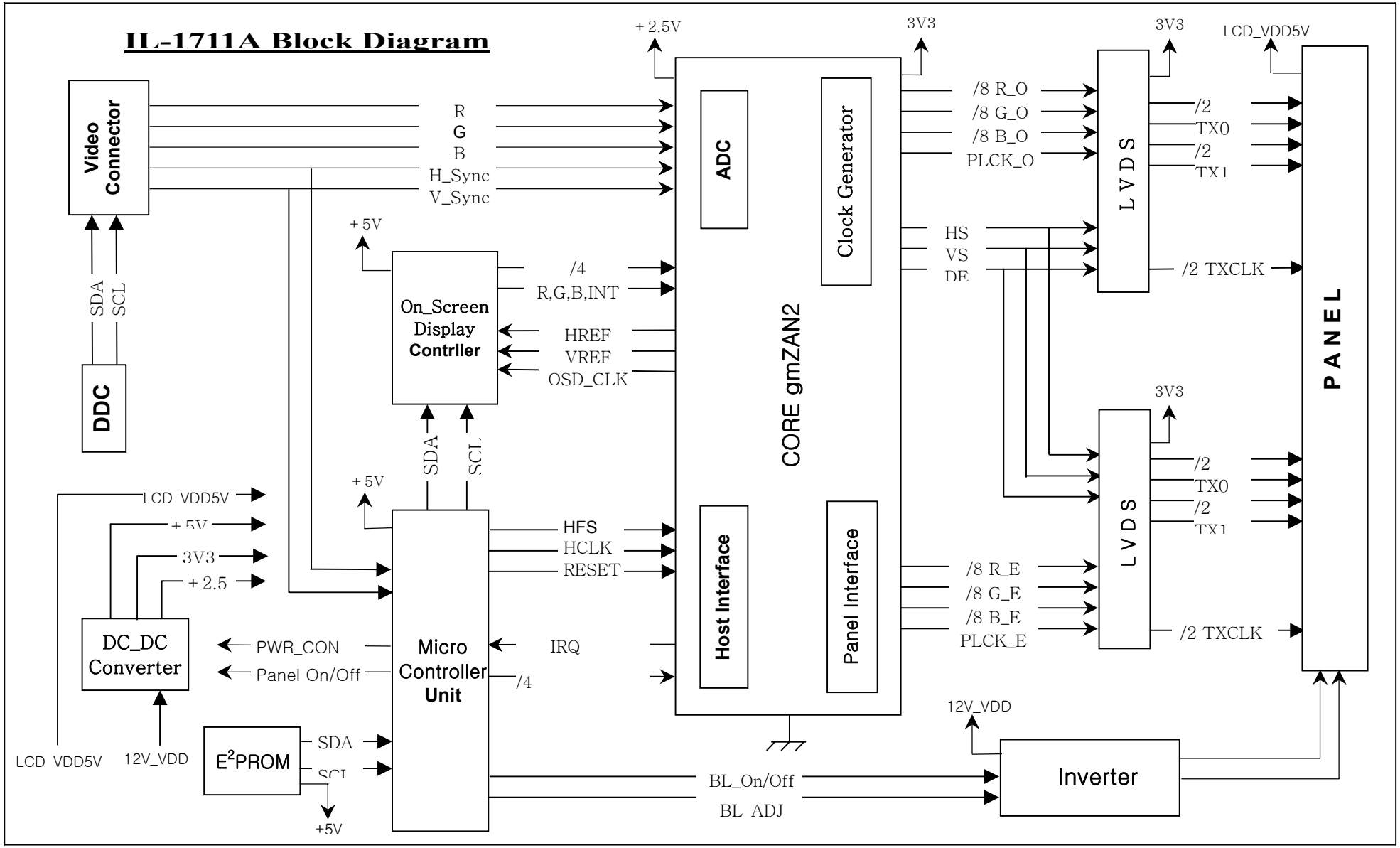
IL-1711A Block Diagram