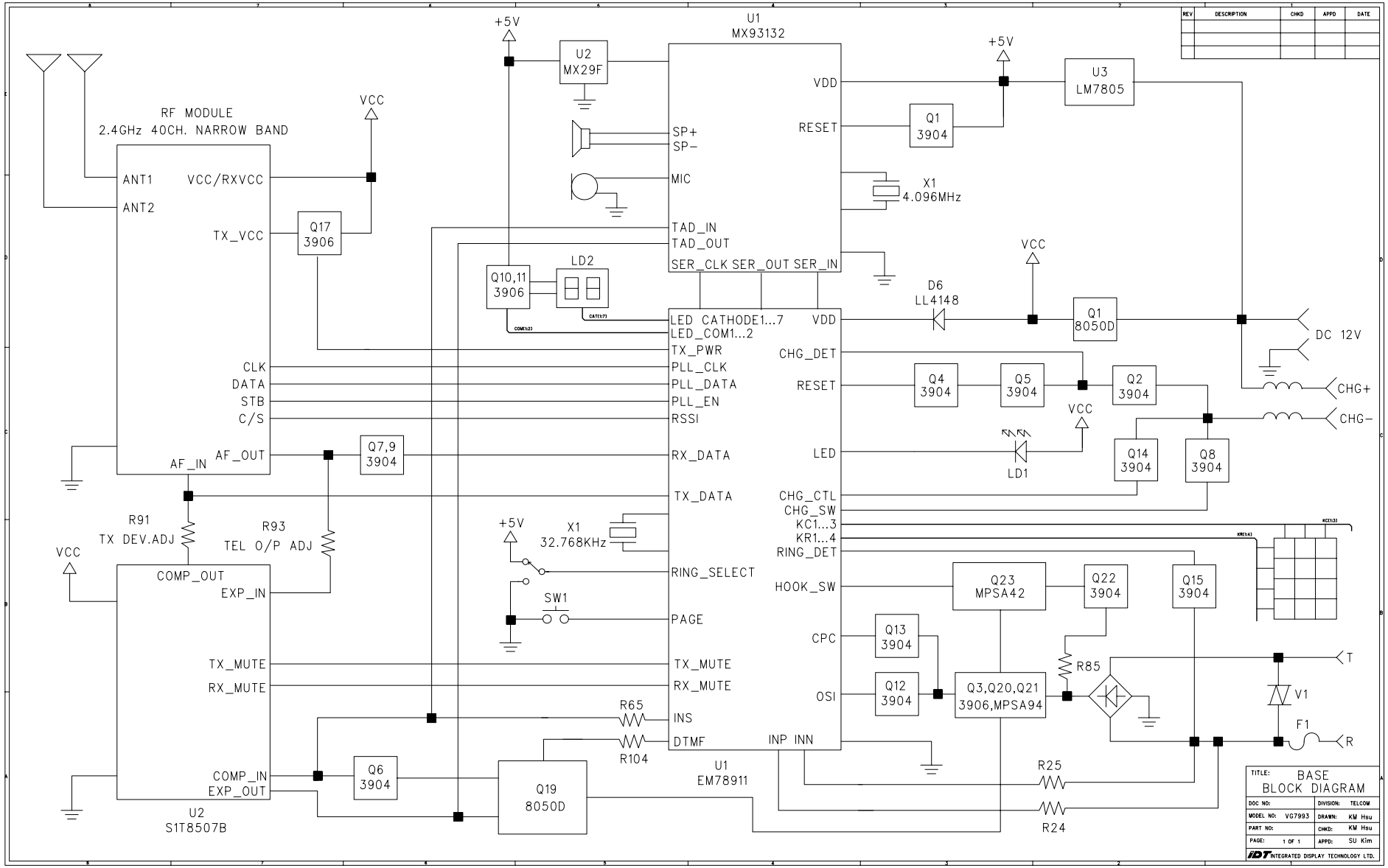
RF MODULE
2.4GHz 40CH. NARROW BAND
ANT1
ANT2
VCC/RXVCC
TX_VCC
CLK
DATA
STB
C/S
AF_IN
AF_OUT
U2
S1T8507B
COMP_OUT
EXP_IN
TX_MUTE
RX_MUTE
COMP_IN
EXP_OUT
R91
TX DEV.ADJ
R93
TEL O/P ADJ
VCC
+5V
U2
MX29F
Q17
3906
Q10,11
3906
LD2
Q7,9
3904
Q6
3904
Q19
8050D
X1
32.768KHz
SW1
R65
R104
U1
MX93132
SP+
SP-
MIC
TAD_IN
TAD_OUT
SER_CLK SER_OUT SER_IN
LED CATHODE1...7
LED_COM1...2
TX_PWR
PLL_CLK
PLL_DATA
PLL_EN
RSSI
RX_DATA
TX_DATA
RING_SELECT
PAGE
TX_MUTE
RX_MUTE
INS
DTMF
U1
EM78911
VDD
RESET
CHG_DET
RESET
LED
CHG_CTL
CHG_SW
KC1...3
KR1...4
RING_DET
HOOK_SW
CPC
OSI
INP INN
Q1
3904
X1
4.096MHz
U3
LM7805
D6
LL4148
Q1
8050D
DC 12V
CHG+
CHG-
Q4
3904
Q5
3904
Q2
3904
Q14
3904
Q8
3904
LD1
Q23
MPSA42
Q22
3904
Q15
3904
Q13
3904
Q12
3904
Q3,Q20,Q21
3906,MPSA94
R85
V1
F1
T
R
R25
R24
TITLE: BASE BLOCK DIAGRAM
DOC NO:
MODEL NO: VG7993
PART NO:
PAGE: 1 OF 1
DIVISION: TELCOM
DRAWN: KM Hsu
CHKD: KM Hsu
APPD: SU Kim
IDT INTEGRATED DISPLAY TECHNOLOGY LTD.

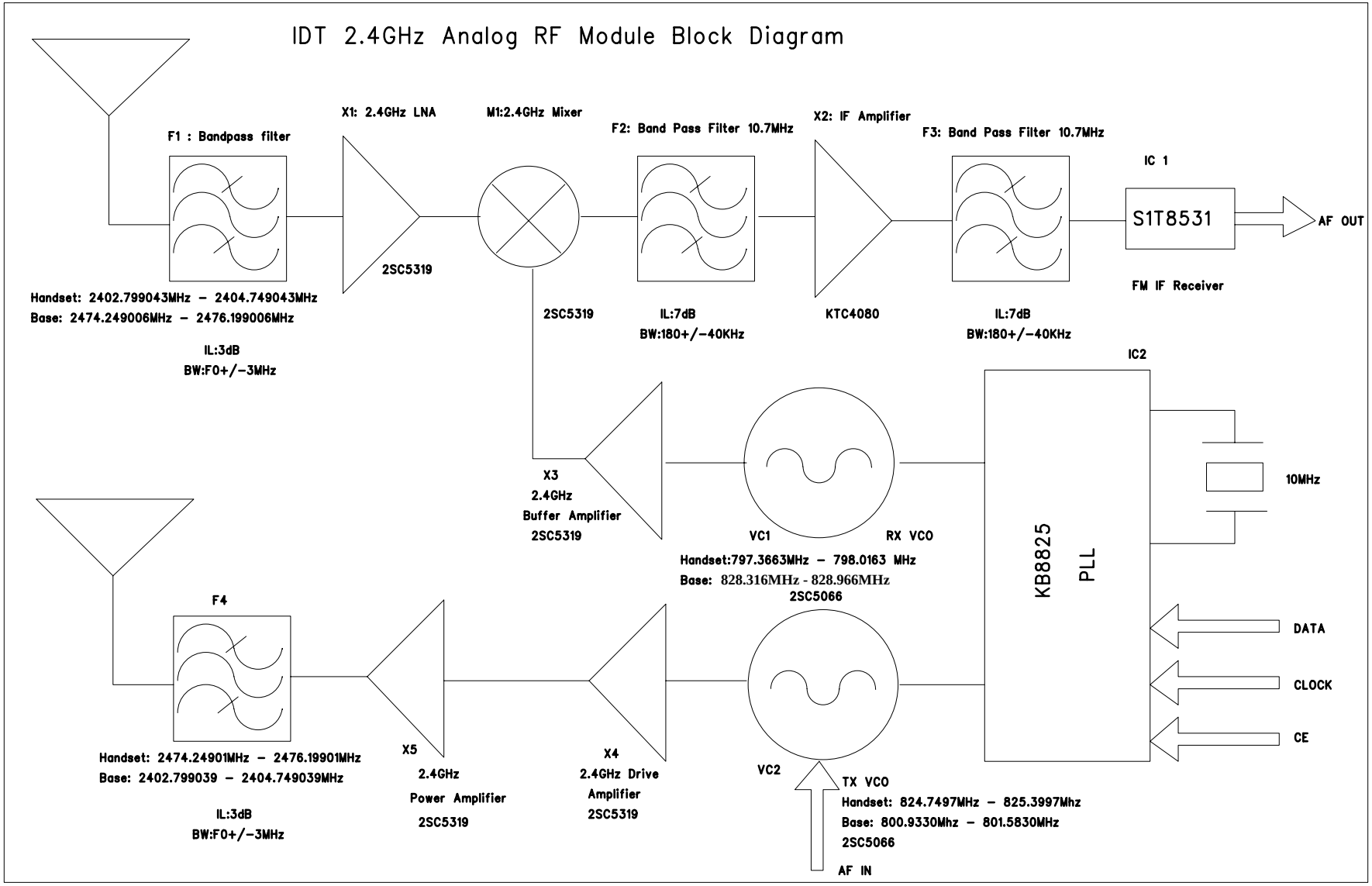
IDT 2.4GHz Analog RF Module Block Diagram
F1 : Bandpass filter
Handset: 2402.799043MHz – 2404.749043MHz
Base: 2474.249006MHz – 2476.199006MHz
IL:3dB
BW:F0+/–3MHz
X1: 2.4GHz LNA
2SC5319
M1:2.4GHz Mixer
2SC5319
F2: Band Pass Filter 10.7MHz
IL:7dB
BW:180+/–40KHz
X2: IF Amplifier
KTC4080
F3: Band Pass Filter 10.7MHz
IL:7dB
BW:180+/–40KHz
IC 1
S1T8531
AF OUT
FM IF Receiver
IC2
X3
2.4GHz
Buffer Amplifier
2SC5319
VC1
RX VCO
Handset:797.3663MHz – 798.0163 MHz
Base: 828.316MHz - 828.966MHz
2SC5066
KB8825
PLL
10MHz
DATA
CLOCK
CE
F4
Handset: 2474.24901MHz – 2476.19901MHz
Base: 2402.799039 – 2404.749039MHz
IL:3dB
BW:F0+/–3MHz
X5
2.4GHz
Power Amplifier
2SC5319
X4
2.4GHz Drive
Amplifier
2SC5319
VC2
TX VCO
Handset: 824.7497MHz – 825.3997Mhz
Base: 800.9330Mhz – 801.5830MHz
2SC5066
AF IN