REVISION RECORD			
VER	ECO/REASON	APPROVAL	DATE
0	Release For Production		

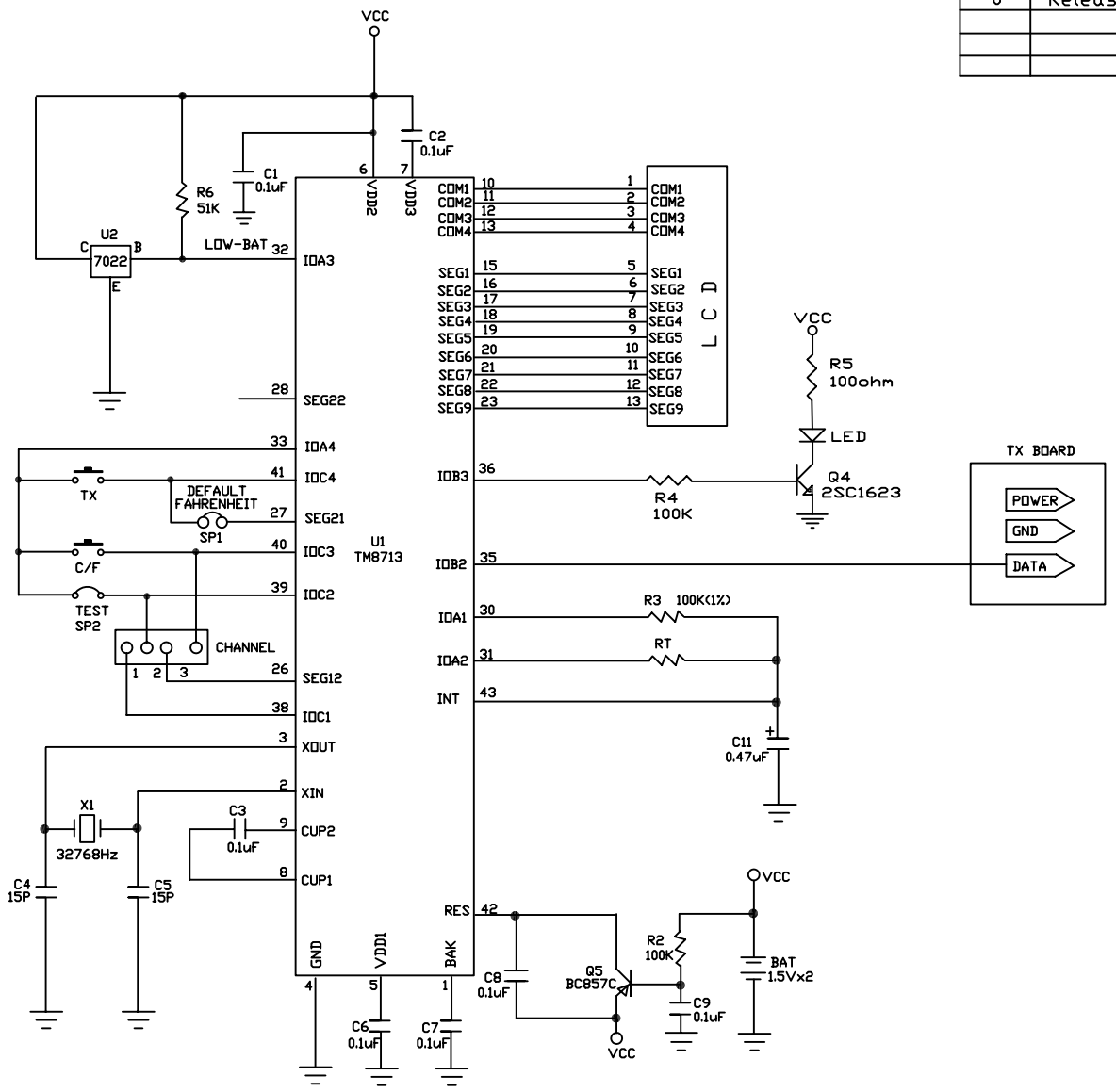

DESIGN:	DATED:	CARRIN ELECTRONICS CO. LTD.				
CHECKED:	DATED:	MODEL NO.	9010TX	PCB NO.		REV:0
APPROVAL:	DATED:	FILE NAME:		PAGE NO.	1 OF 1	