BOWENS INTERNATIONAL LIMITED
Part of CALUMET INTERNATIONAL Ltd
355 Old Road, Clacton-on-Sea, Essex, CO15 3RH
Tel. 01255 422807 Fax. 01255 436342

IF IN DOUBT ASK! DO NOT SCALE

A3 | Drg. No. 05117 | ISSUE E | Sht. 6 of 10

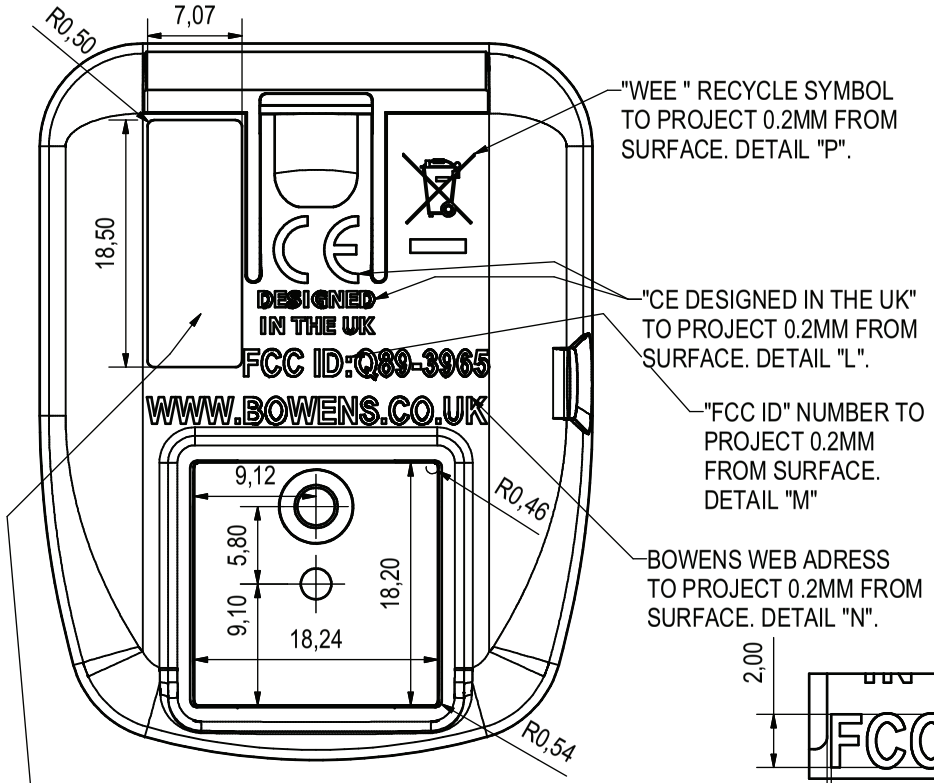

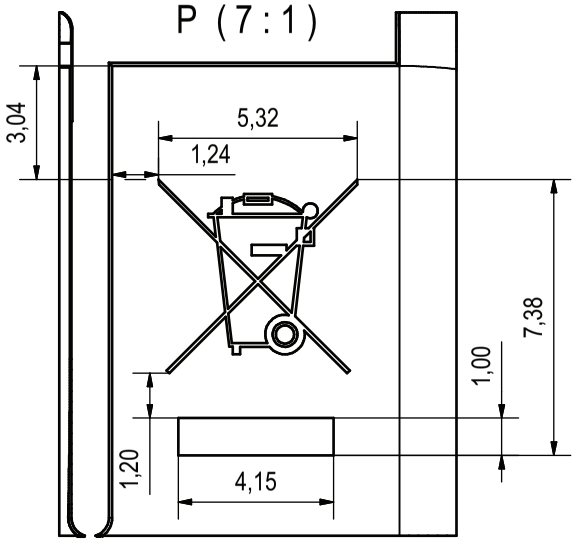

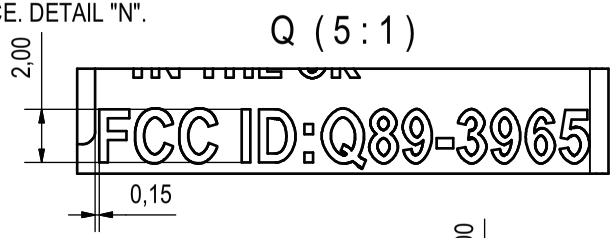

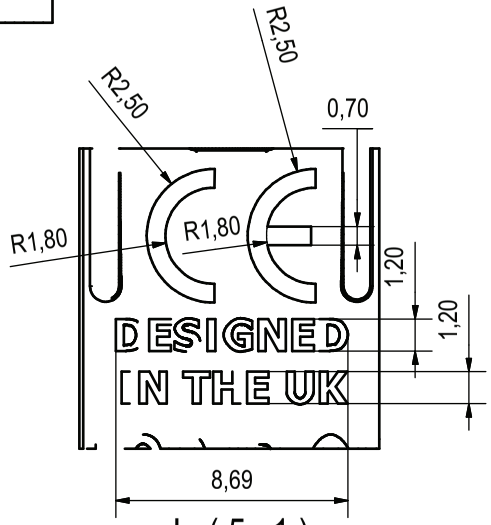

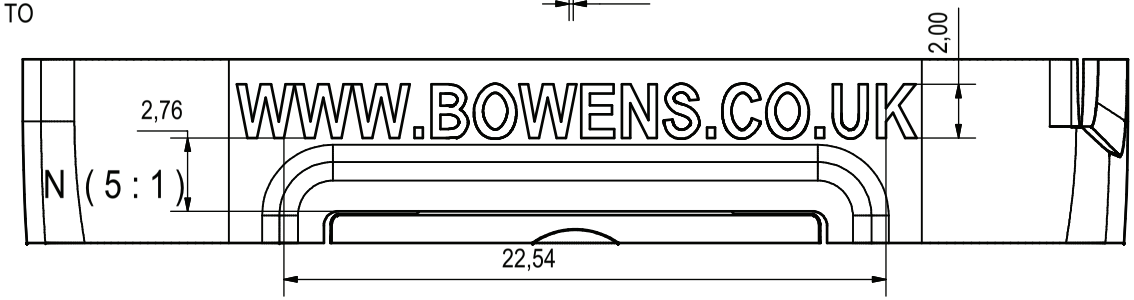

Hole Table	Qty.	Equipment first used on:	Qty.
		PULSAR TX	1

TITLE: PULSAR TX MOULD

MATL. SEE SHEET 1

FINISH SEE SHEET 1

Scale 2.5 : 1 UNLESS STATED | Tolerance General ± 0.13 | Dimensions in mm.

Drawn: BLAIR | Date: 04/05/2010

Checked: | Date:

Iss.	Date.	Modification	Sig.
E	04/11/2010	FCC ID NO./ TITLE CHANGED	BS
D	28/10/2010	CUT OUT ADDED	BS
C	20/10/2010	FCC ID NO ADDED + FONT CHANGE	BS
B	20/05/2010	REDESIGN	BS
A	04/05/2010	ORIGINAL	BS

Label Location