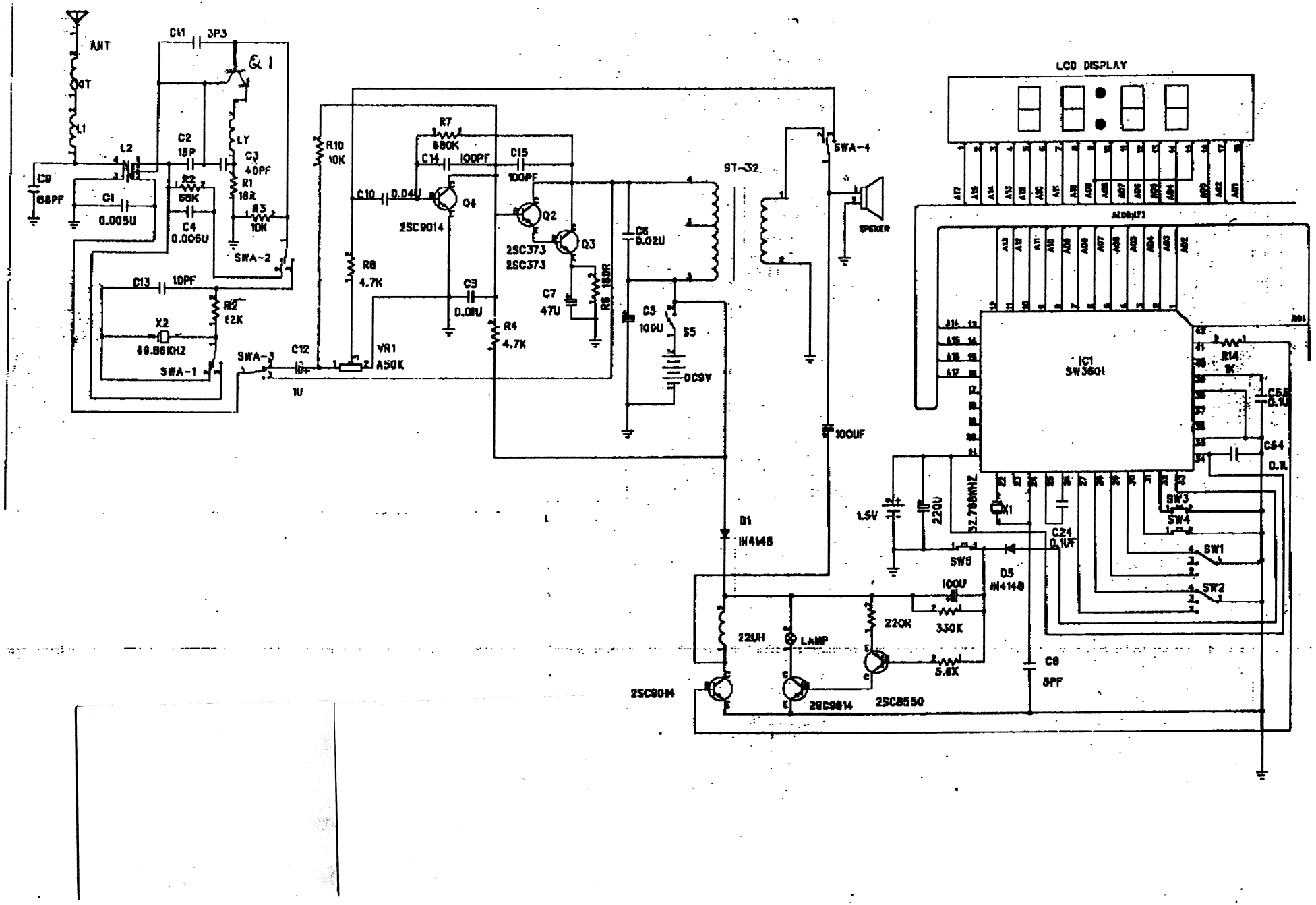
ANT
GT
L1
L2
C9
68PF
C1
0.005U
C11
3P3
Q1
C2
15P
LY
C3
40PF
R2
68K
R1
18R
C4
0.005U
R3
10K
SWA-2
C13
10PF
R12
12K
X2
49.86KHZ
SWA-1
SWA-3
C12
10PF
1U
R10
10K
R8
4.7K
VR1
A50K
R7
680K
C14
100PF
C10
0.04U
Q4
2SC9014
C15
100PF
Q2
2SC373
2SC373
Q3
C7
47U
R6
180R
C3
0.08U
R4
4.7K
C6
0.02U
C5
100U
S5
DC9V
ST-32
SWA-4
SPEAKER
100UF
D1
IN4148
22UH
LAMP
2SC9014
2SC9014
2SC8550
220K
330K
5.6K
100U
D5
IN4148
C8
8PF
1.5V
220U
32.768KHZ
X1
C24
0.1UF
SW5
LCD DISPLAY
IC1
SW3601
R14
1K
C55
0.1U
C54
0.1U
SW3
SW4
SW1
SW2