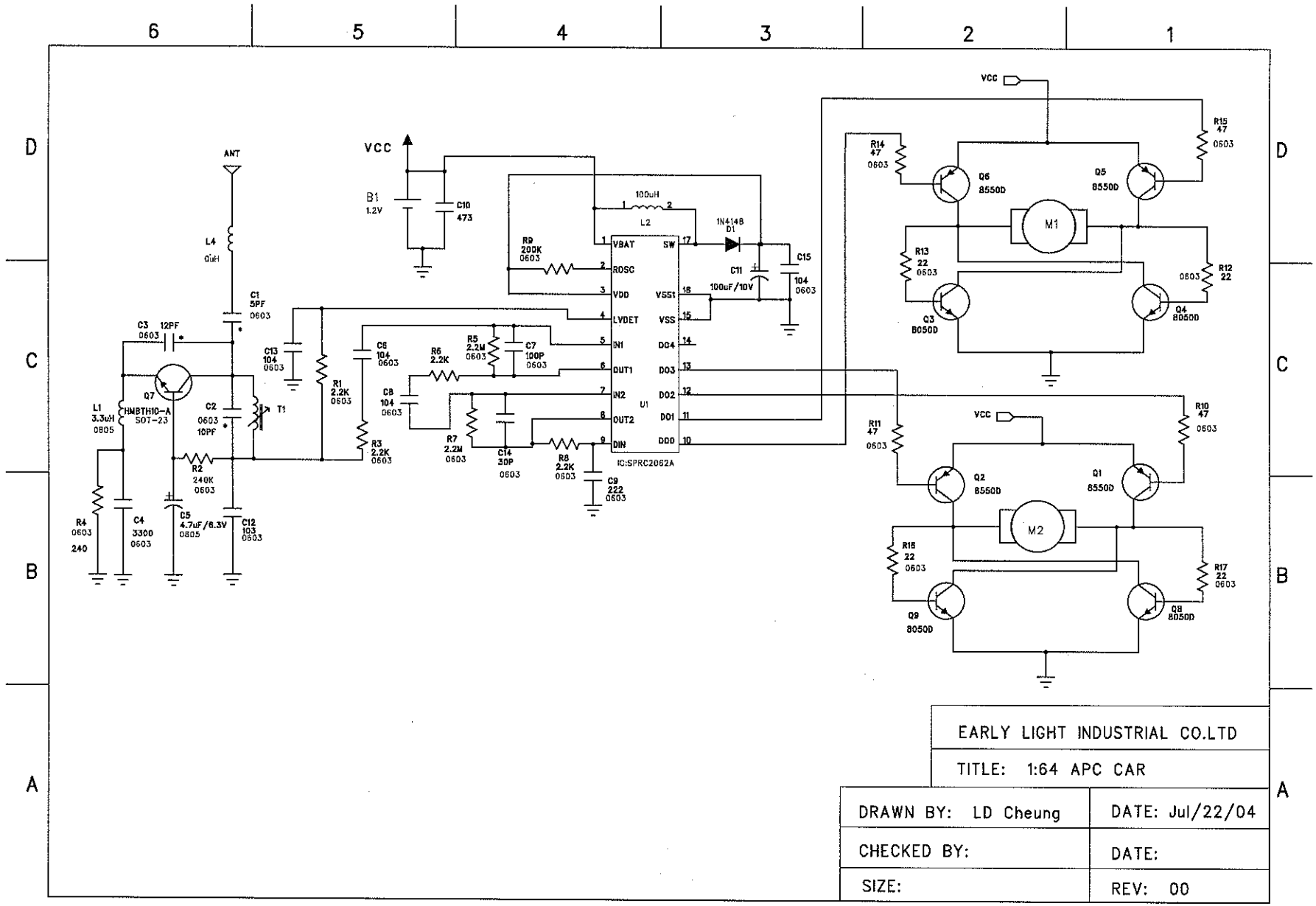

EARLY LIGHT INDUSTRIAL CO.LTD	
TITLE: 1:64 APC CAR	
DRAWN BY: LD Cheung	DATE: Jul/22/04
CHECKED BY:	DATE:
SIZE:	REV: 00