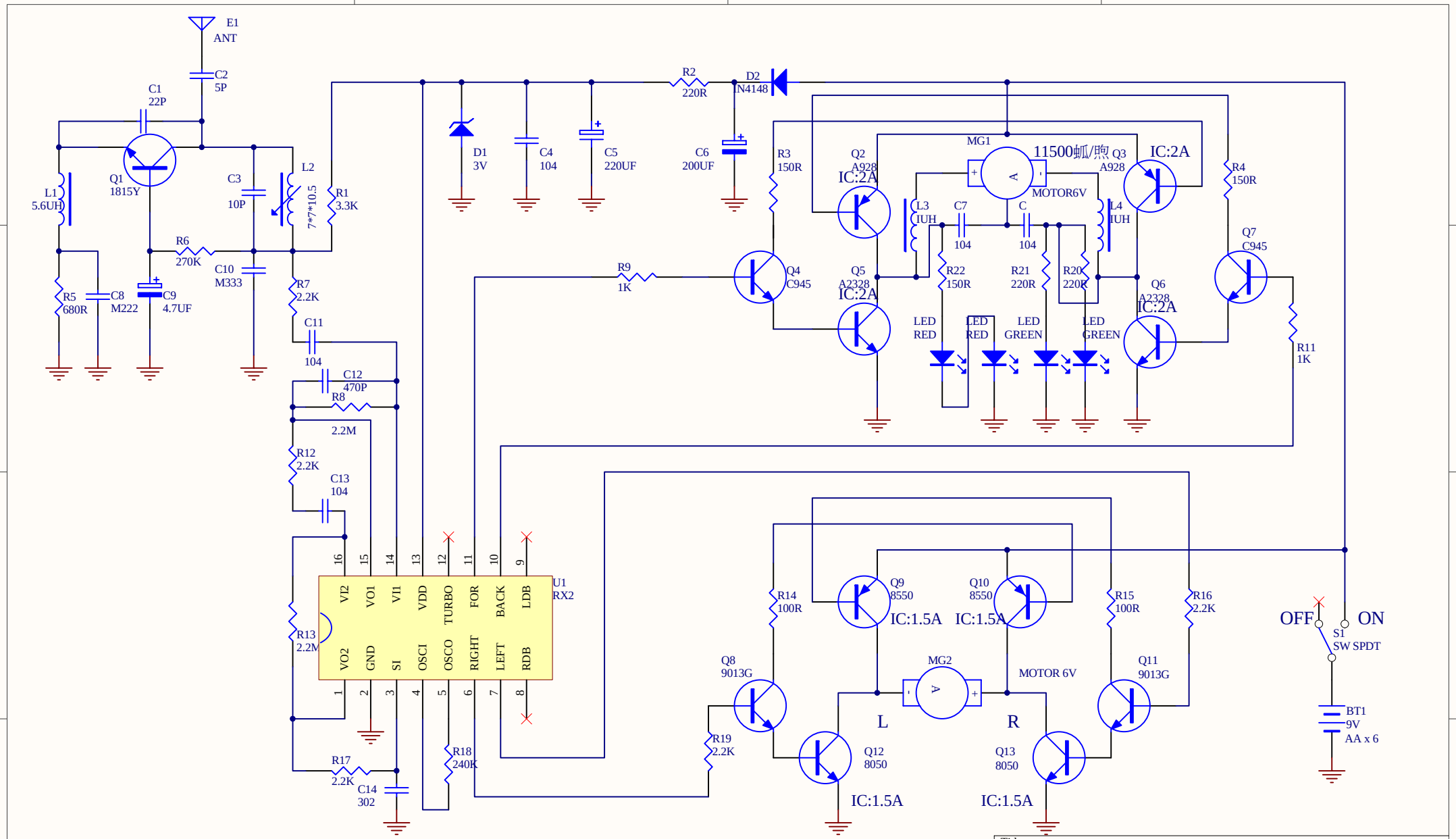

Title	49.860MHz Radio Control (RX)	
Size A4	Number	Revision 1.0
Date: 4/6/2007	Sheet of 1	
File: D:\My Documents\..\49MHZRX.Sch	Drawn By: TIGER	