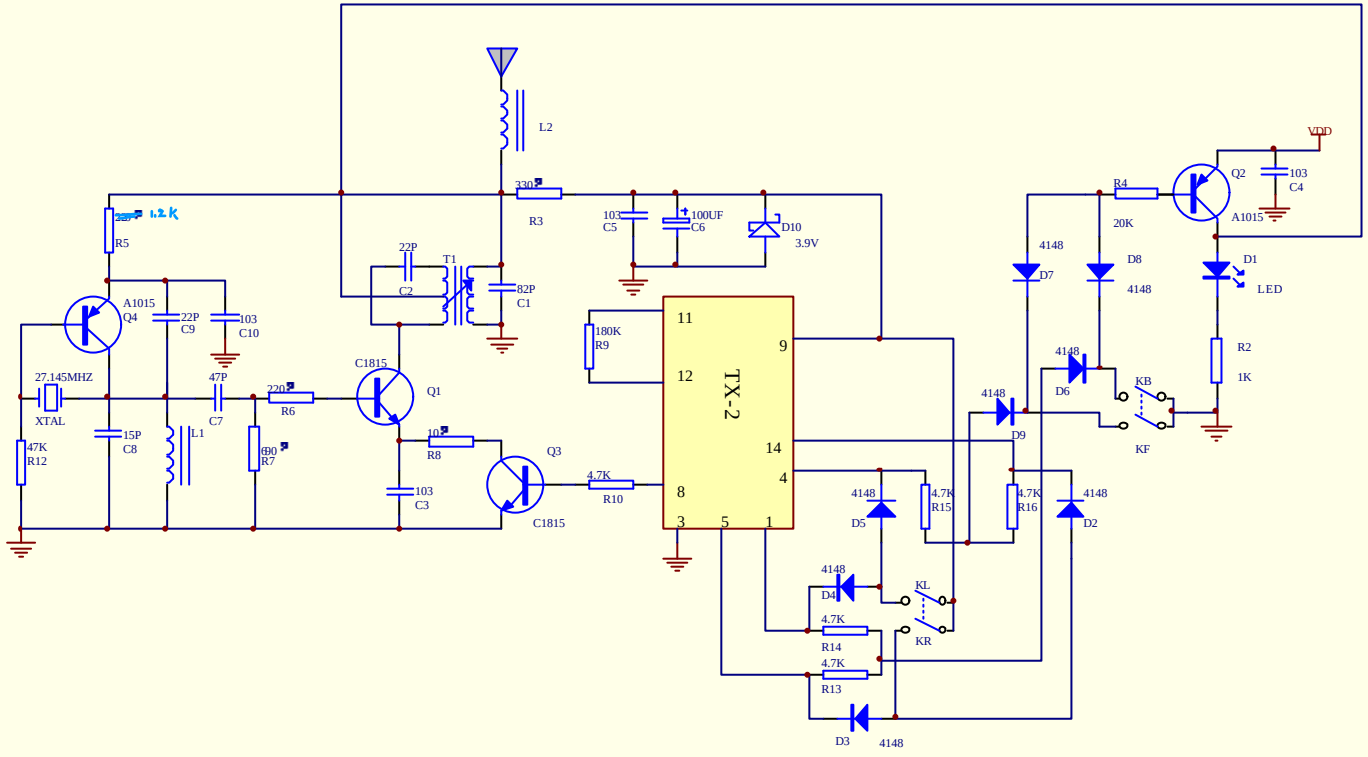

Title	遥控车（船）电路原理图		
Size A4	Number		Revision
Date:	17-Apr-2003	Sheet of	
File:	E:\protel98\...\[illegible](27mhz).Sch	Drawn By:	