Xplore Wildcat II

Project code:
PCB P/N:
REVISION:

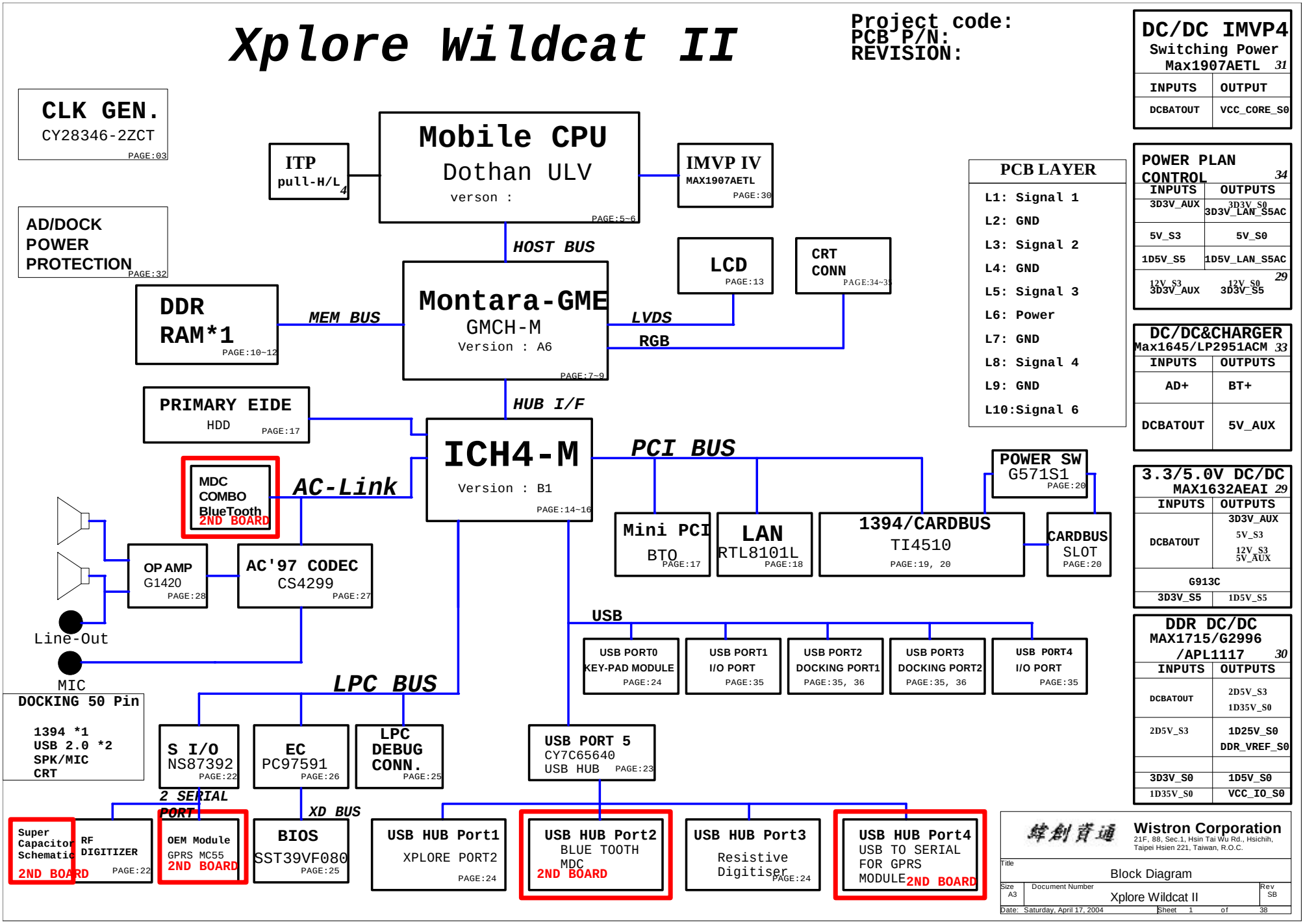

DC/DC IMVP4

Switching Power
Max1907AETL 31

INPUTS	OUTPUT
DCBATOUT	VCC_CORE_S0

POWER PLAN CONTROL 34

INPUTS	OUTPUTS
3D3V_AUX	3D3V_S0 3D3V_LAN_S5AC
5V_S3	5V_S0
1D5V_S5	1D5V_LAN_S5AC
12V_S3 3D3V_AUX	12V_S0 3D3V_S5

29

PCB LAYER

L1: Signal 1
L2: GND
L3: Signal 2
L4: GND
L5: Signal 3
L6: Power
L7: GND
L8: Signal 4
L9: GND
L10:Signal 6

DC/DC&CHARGER

Max1645/LP2951ACM 33

INPUTS	OUTPUTS
AD+	BT+
DCBATOUT	5V_AUX

3.3/5.0V DC/DC

MAX1632AEAI 29

INPUTS	OUTPUTS
DCBATOUT	3D3V_AUX 5V_S3 12V_S3 5V_AUX
G913C	
3D3V_S5	1D5V_S5

DDR DC/DC

MAX1715/G2996 /APL1117 30

INPUTS	OUTPUTS
DCBATOUT	2D5V_S3 1D35V_S0
2D5V_S3	1D25V_S0 DDR_VREF_S0
3D3V_S0	1D5V_S0
1D35V_S0	VCC_IO_S0

Wistron Corporation
21F, 88, Sec.1, Hsin Tai Wu Rd., Hsichih, Taipei Hsien 221, Taiwan, R.O.C.

Title: Block Diagram

Size: A3 | Document Number: Xplore Wildcat II | Rev: SB

Date: Saturday, April 17, 2004 | Sheet 1 of 38

Xplore Wildcat Revision History

1. Q26, Q36 CHANGE TO PNP AND Q36 CONNECT TO 5V_AUX
2. R410 REMOVE; R409 SHORT
3. R292, R299, R302 CHANGE TO 75R2F
4.BATTERY CONNECTOR PAD 1-13 SWITCH
5. L28 CHANGE TO 2.2U
6. C430, C367 CHANGE TO 0.2U 50V

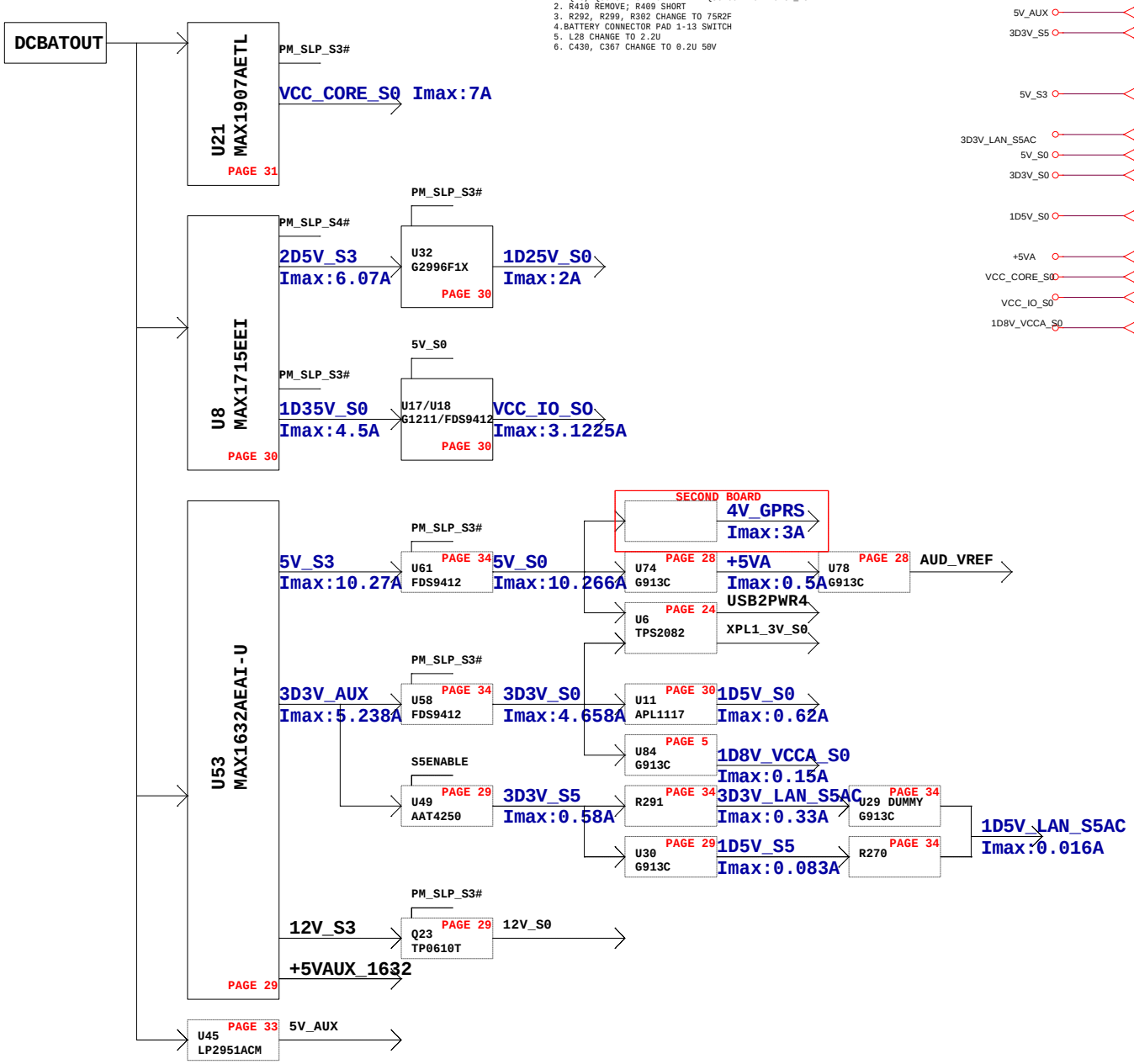

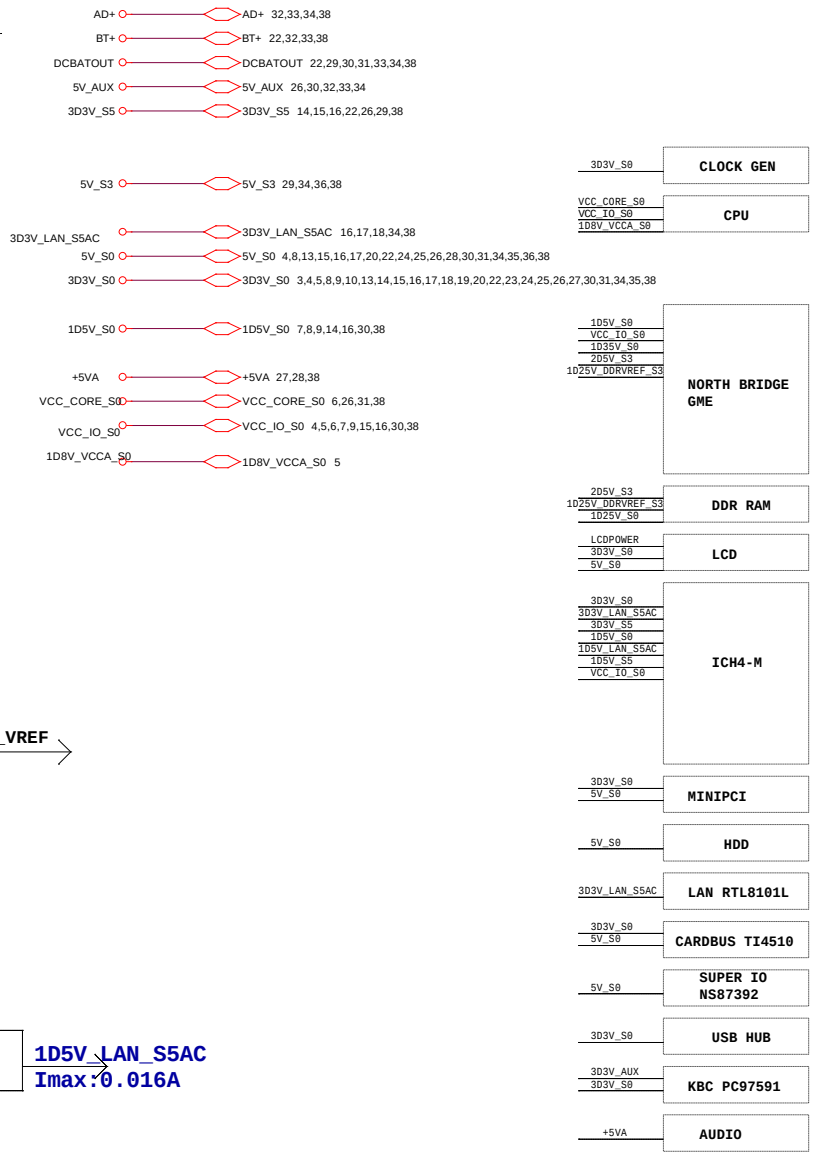

Wistron Corporation
21F, 88, Sec.1, Hsin Tai Wu Rd., Hsichih,
Taipei Hsien 221, Taiwan, R.O.C.

Title: REVISION HISTORY&POWER BLOCK DIAGRAM

Size	Document Number	Rev
A3	Xplore Wildcat II	SB

Date: Saturday, April 17, 2004 Sheet 2 of 38

CPU & MEMORY Freq. Selection

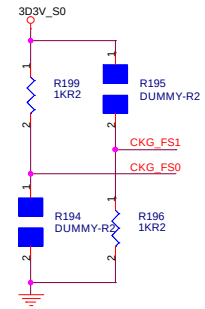

ICS950813

Frequency Setting

	CPU	AGP	PCI
FS1/0 = 00	100.00MHz	66.67MHz	33.33MHz
FS1/0 = 01	133.33MHz	66.67MHz	33.33MHz
FS1/0 = 10	200.00MHz	66.67MHz	33.33MHz
FS1/0 = 11	166.66MHz	66.67MHz	33.33MHz

FS2 = 0 unbuffer mode (disable 66MHz-IN)
FS2 = 1 buffer mode

Mult0 = 0 Rr=221,Iref=5mA
=>Vswing=1.0V@50ohm
Mult0 = 1 Rr=475,Iref=2.32mA
=>Vswing=0.7V@50ohm

CY28346-2

Frequency Setting

	CPU	AGP	PCI
FS1/0 = 00	66.00MHz	66.67MHz	33.33MHz
FS1/0 = 01	100.00MHz	66.67MHz	33.33MHz
FS1/0 = 10	200.00MHz	66.67MHz	33.33MHz
FS1/0 = 11	133.33MHz	66.67MHz	33.33MHz

FS2 = 0 unbuffer mode (disable 66MHz-IN)
FS2 = 1 buffer mode

Mult0 = 0 Rr=221,Iref=5mA
=>Vswing=1.0V@50ohm
Mult0 = 1 Rr=475,Iref=2.32mA
=>Vswing=0.7V@50ohm

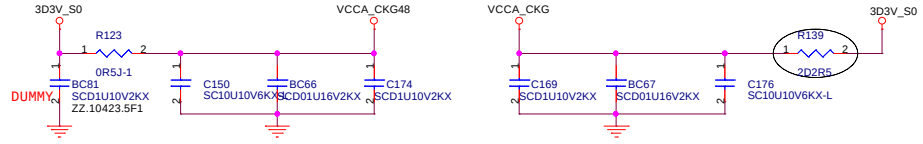

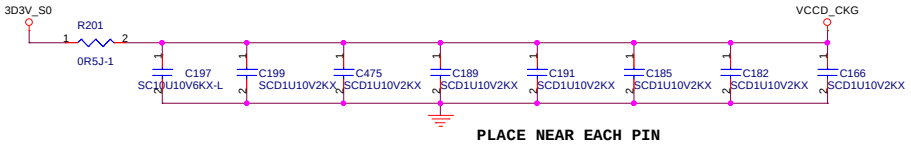

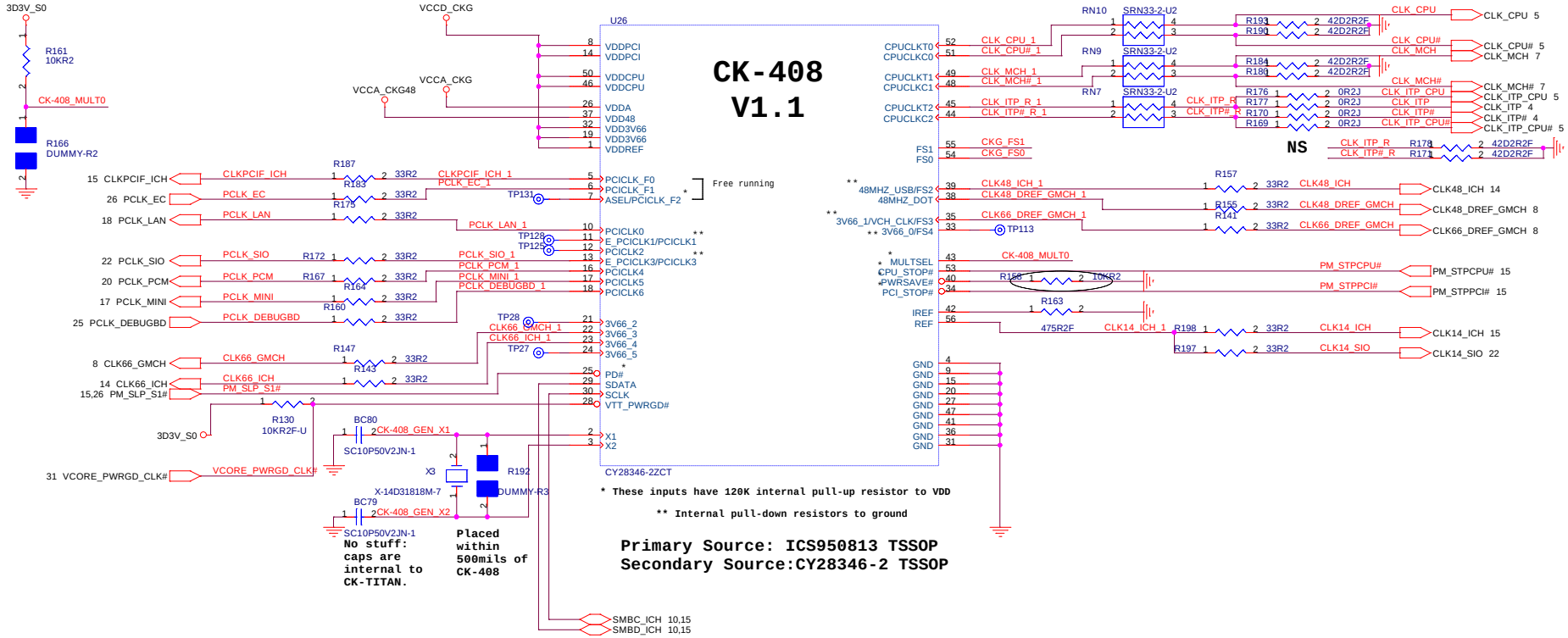

Wistron Corporation
21F, 88, Sec.1, Hsin Tai Wu Rd., Hsichih,
Taipei Hsien 221, Taiwan, R.O.C.

Title		
Clock Generator		
Size A3	Document Number Xplore Wildcat II	Rev SB
Date: Monday, April 19, 2004	Sheet 3 of 38	

THERMAL SENSOR

CPU_BOTTOM

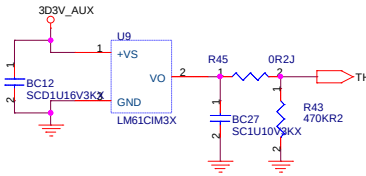

THERMAL_VGA

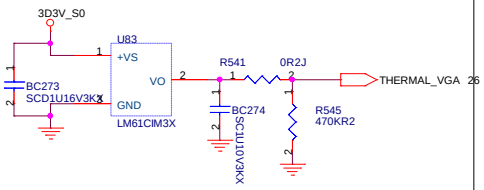

CPU INTERNAL

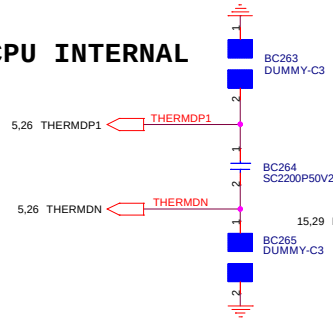

HW Thermal Protection

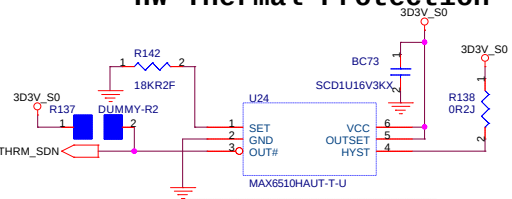

HW thermal shutdown temperature setting = 95 degree

THERMAL RECODER

(SMBUS ID=A8/A9H)
(SMBUS ID=AA/ABH)
(SMBUS ID=AC/ADH)
(SMBUS ID=AE/AFH)

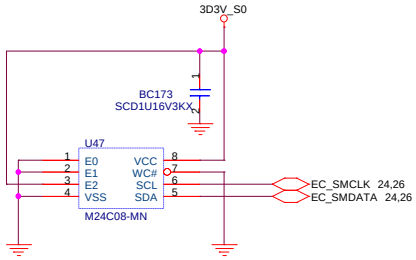

FAN CONTROLLER

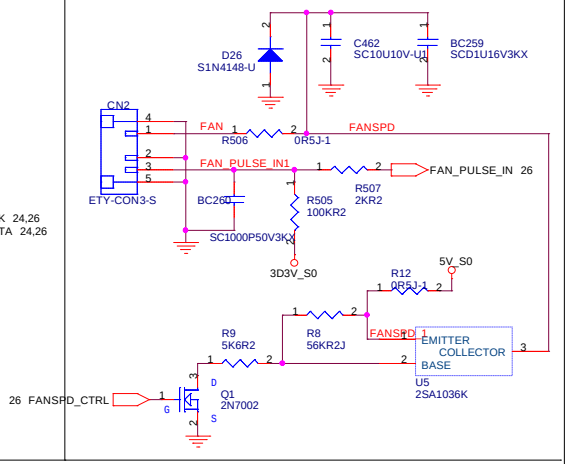

PULLUP RESISTOR<1"FROM ITP PORT PINS

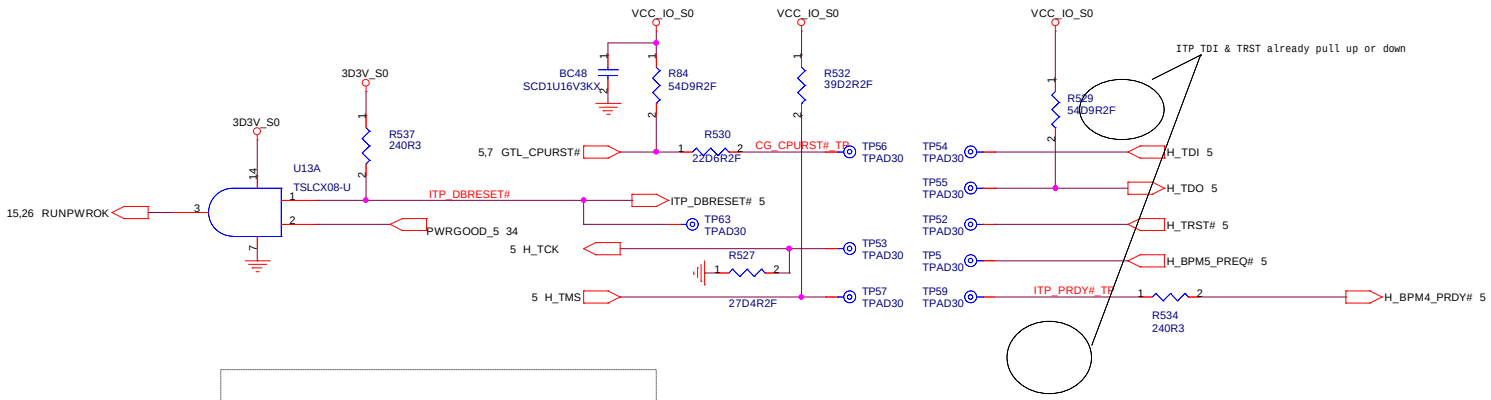

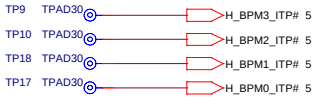

DELETE ITP
CLK
RESISTOR

Wistron Corporation
21F, 88, Sec.1, Hsin Tai Wu Rd., Hsichih,
Taipei Hsien 221, Taiwan, R.O.C.

Title	THERMAL SENSOR/FAN/ITP	
Size A3	Document Number Xplore Wildcat II	Rev SB
Date: Monday, April 19, 2004	Sheet 4 of 38	

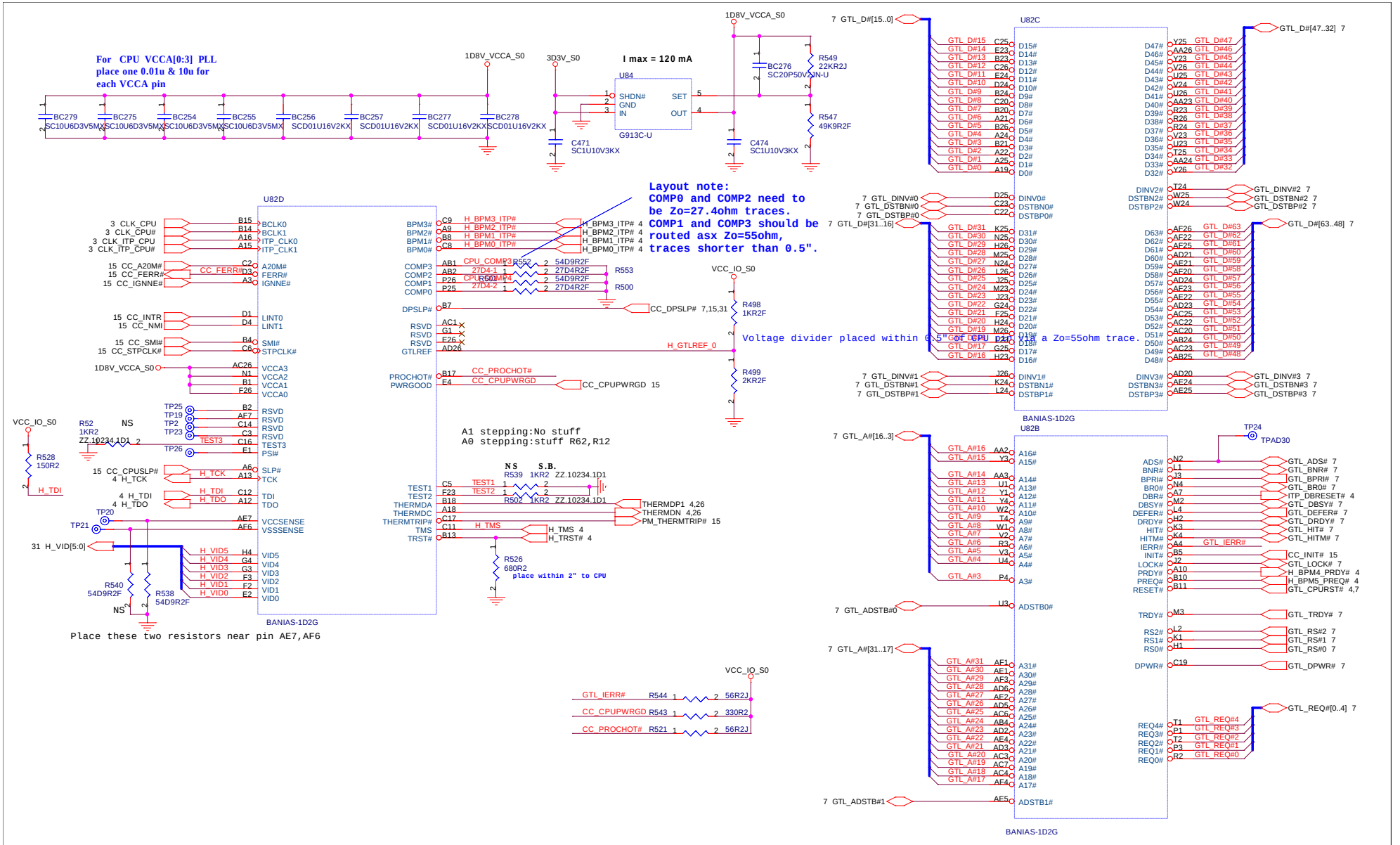

Wistron Corporation
21F, 88, Sec.1, Hsin Tai Wu Rd., Hsichih,
Taipei Hsien 221, Taiwan, R.O.C.

Title: CPU-Dothan(1/2)

Size: A3 | Document Number: Xplore Wildcat II | Rev: SB

Date: Monday, April 19, 2004 | Sheet 5 of 38

Ref 10598 EMTS
P69 need place
Decoupling
near between
VCCQ ???

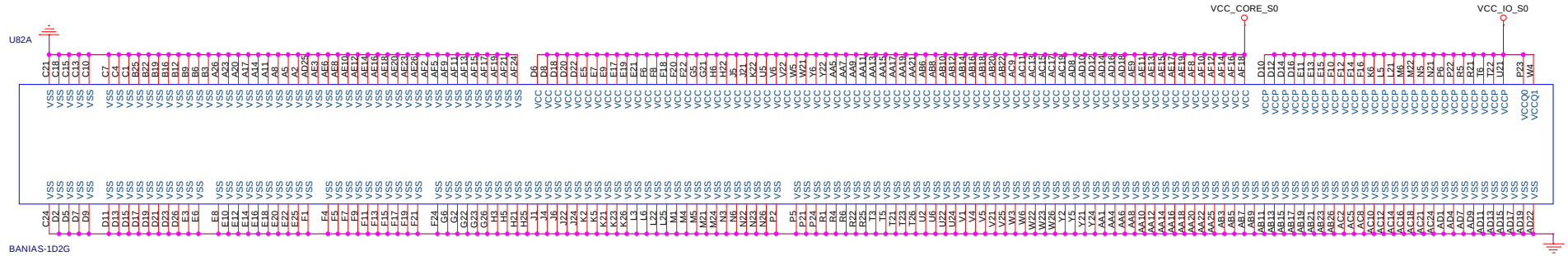

VCC_CORE_S0

10uF_6.3V *25 ,0805,X5R

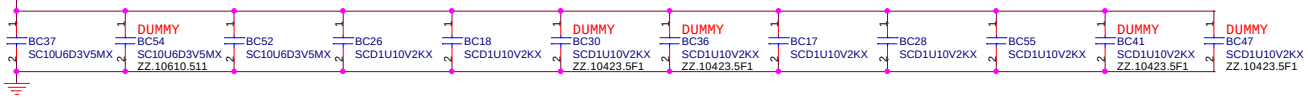

VCC_CORE_S0

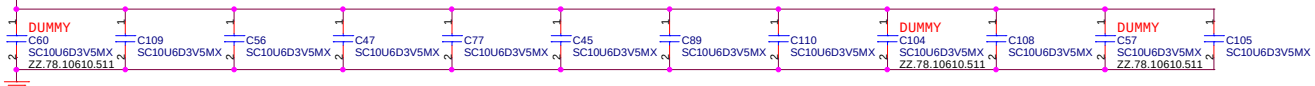

VCC_CORE_S0

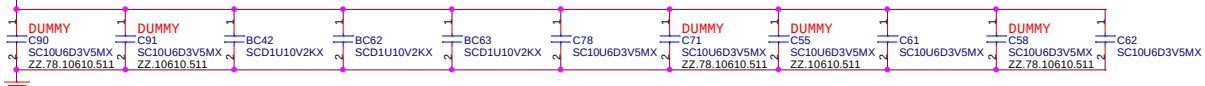

VCC_IO_S0

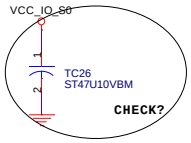

VCC_IO_S0

0.1uF_16V *10 ,0603,X7R

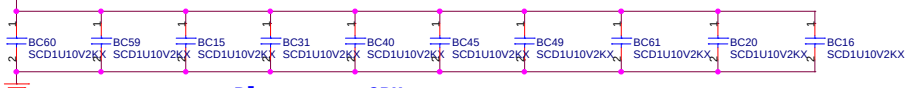

Place near CPU

緯創資通 **Wistron Corporation**
21F, 88, Sec.1, Hsin Tai Wu Rd., Hsichih,
Taipei Hsien 221, Taiwan, R.O.C.

Title	CPU-Dothan(2/2)	
Size A3	Document Number Xplore Wildcat II	Rev SB
Date: Monday, April 19, 2004	Sheet 6 of 38	

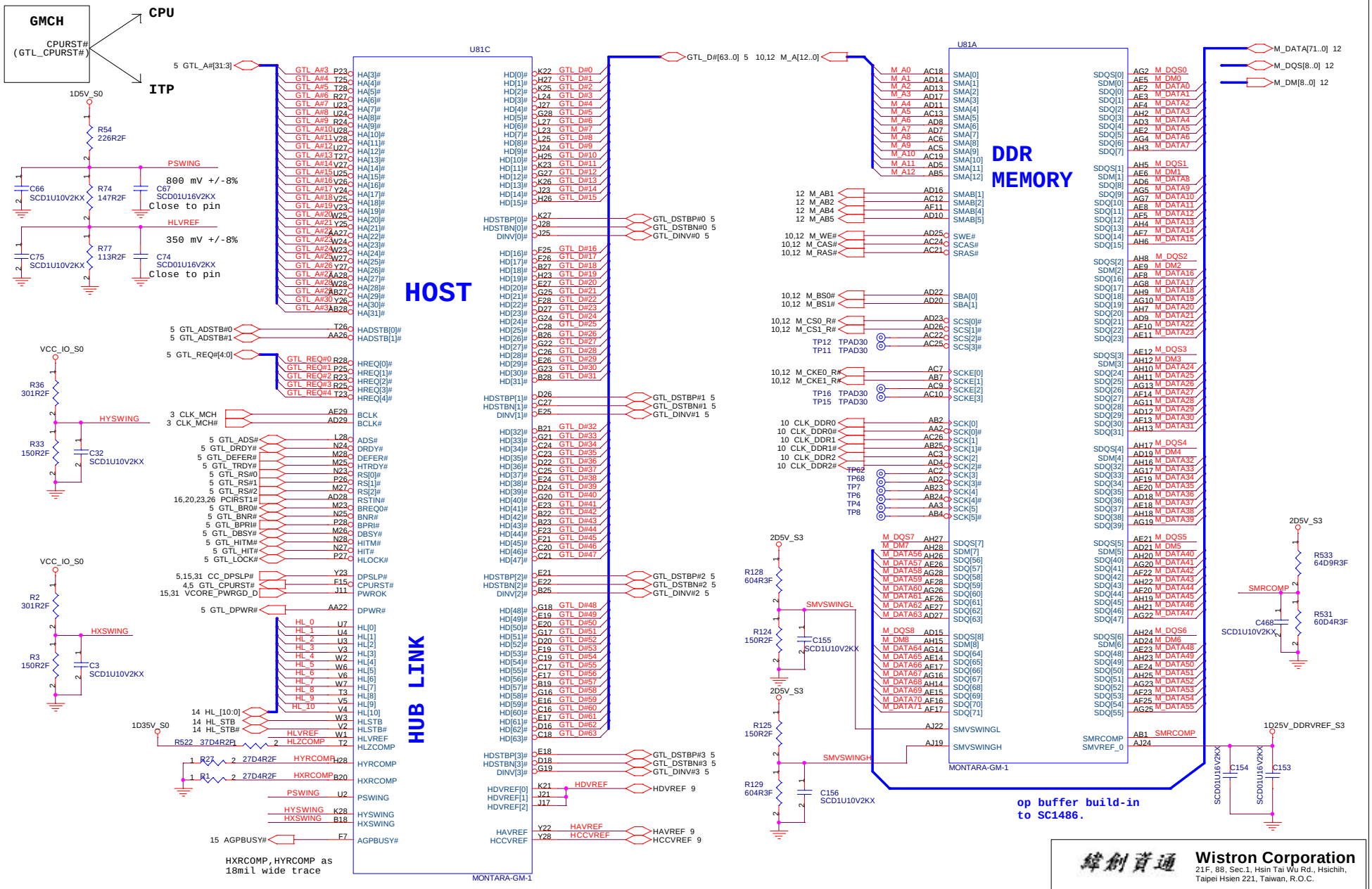

Wistron Corporation
21F, 88, Sec.1, Hsin Tai Wu Rd., Hsichih,
Taipei Hsien 221, Taiwan, R.O.C.

Title: Montara-GM(1/3)

Size: A3 | Document Number: Xplore Wildcat II | Rev: SB

Date: Monday, April 19, 2004 | Sheet 7 of 38

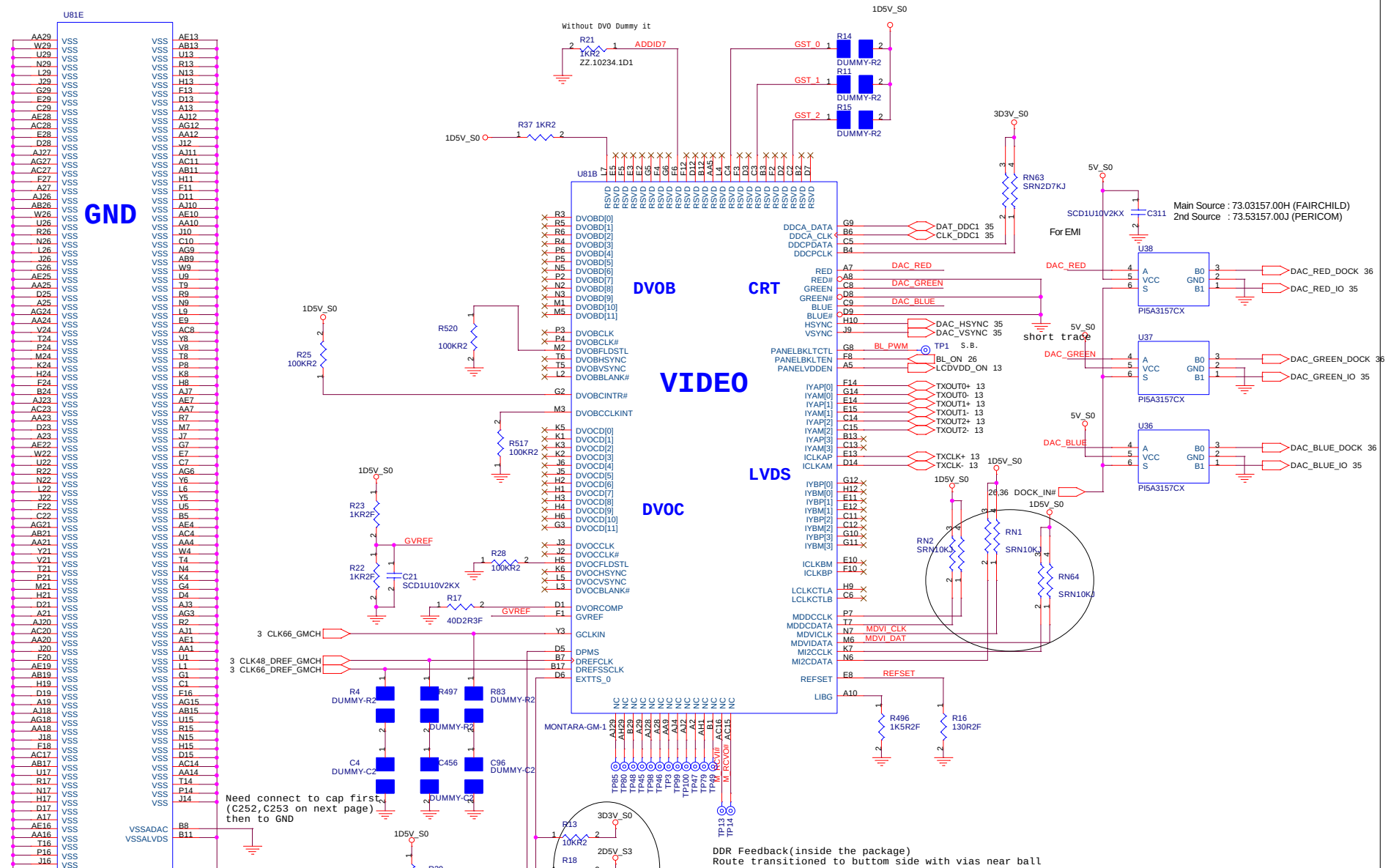
U81E
GND
MONTARA-GM-1
VSSADAC
VSSALVDS
U81B
VIDEO
DVOB
DVOC
CRT
LVDS
Without DVO Dummy it
R21 1KR2
ZZ.10234.1D1
ADDID7
1D5V_S0
R37 1KR2
GST_0
GST_1
GST_2
R14
R11
R15
DUMMY-R2
3D3V_S0
RN63 SRN2D7KJ
5V_S0
SCD1U10V2KX
C311
For EMI
Main Source : 73.03157.00H (FAIRCHILD)
2nd Source : 73.53157.00J (PERICOM)
U38
U37
U36
PI5A3157CX
DAC_RED
DAC_GREEN
DAC_BLUE
DAC_RED_DOCK 36
DAC_RED_IO 35
DAC_GREEN_DOCK 36
DAC_GREEN_IO 35
DAC_BLUE_DOCK 36
DAC_BLUE_IO 35
DDCA_DATA
DDCA_CLK
DDCPDATA
DDCPCLK
DAT_DDC1 35
CLK_DDC1 35
DAC_HSYNC 35
DAC_VSYNC 35
short trace
BL_PWM
TP1
S.B.
BL_ON 26
LCDVDD_ON 13
TXOUT0+ 13
TXOUT0- 13
TXOUT1+ 13
TXOUT1- 13
TXOUT2+ 13
TXOUT2- 13
TXCLK+ 13
TXCLK- 13
26,36 DOCK_IN#
RN1 SRN10KJ
RN2 SRN10KJ
RN64 SRN10KJ
MDVI_CLK
MDVI_DAT
REFSET
R496 1K5R2F
R16 130R2F
R520 100KR2
R25 100KR2
R517 100KR2
R23 1KR2F
R22 1KR2F
C21 SCD1U10V2KX
R28 100KR2
R17 40D2R3F
GVREF
3 CLK66_GMCH
3 CLK48_DREF_GMCH
3 CLK66_DREF_GMCH
R4 DUMMY-R2
R497 DUMMY-R2
R83 DUMMY-R2
C4 DUMMY-C2
C456 DUMMY-C2
C96 DUMMY-C2
Need connect to cap first
(C252,C253 on next page)
then to GND
R29 1KR2
CLK48_DPMS
15 PM_SUS_CLK
Q2 2N7002
R13 10KR2
R18 10KR2
2D5V_S3
ZZ.63.10334.1D1
???
DDR Feedback(inside the package)
Route transitioned to buttom side with vias near ball
Wistron Corporation
21F, 88, Sec.1, Hsin Tai Wu Rd., Hsichih,
Taipei Hsien 221, Taiwan, R.O.C.
Title
Montara-GM(2/3)
Size A3
Document Number
Xplore Wildcat II
Rev SB
Date: Monday, April 19, 2004
Sheet 8 of 38

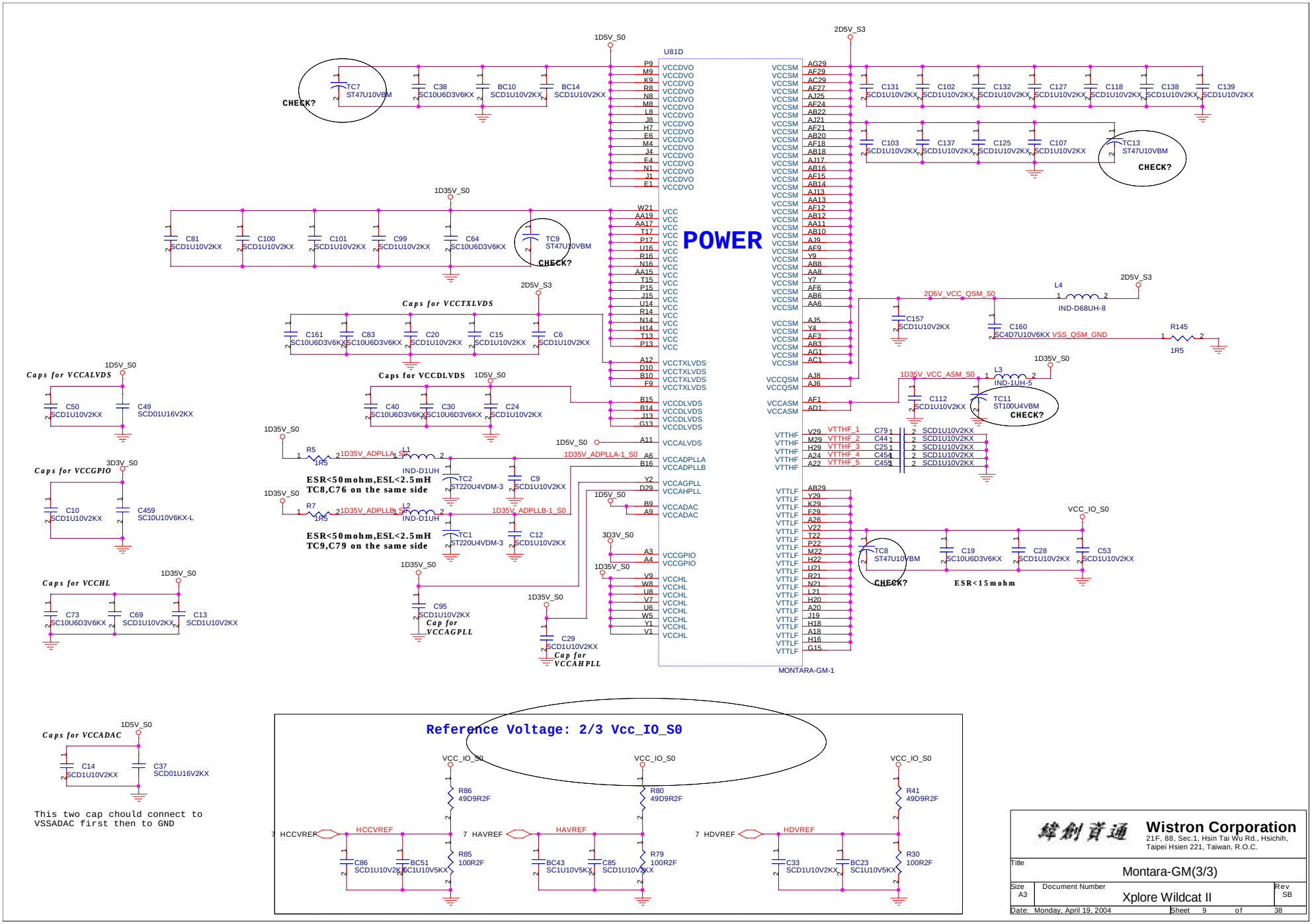

Wistron Corporation
21F, 88, Sec.1, Hsin Tai Wu Rd., Hsichih,
Taipei Hsien 221, Taiwan, R.O.C.

Title: Montara-GM(3/3)

Size: A3 | Document Number: Xplore Wildcat II | Rev: SB

Date: Monday, April 19, 2004 | Sheet 9 of 38

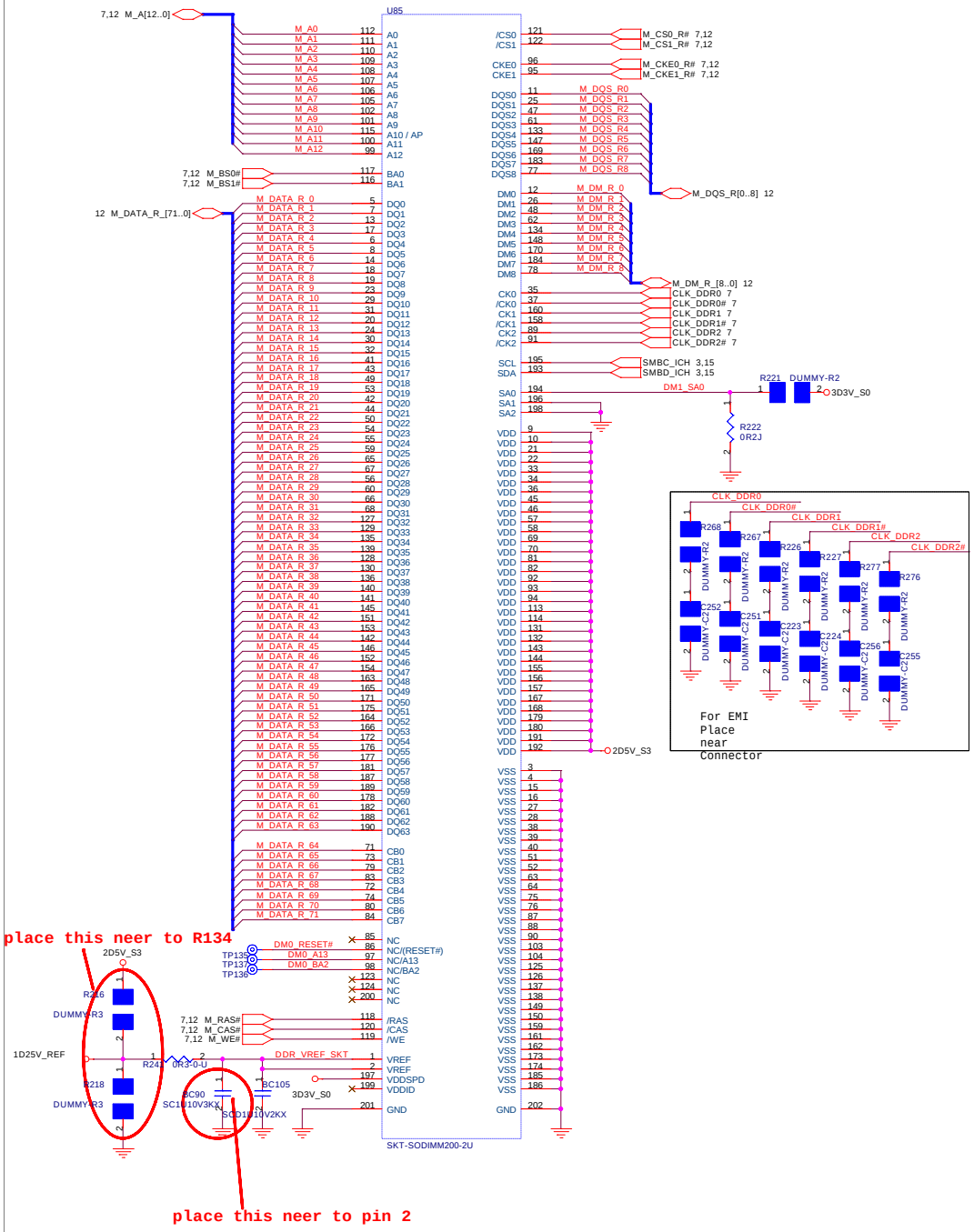

Wistron Corporation
21F, 88, Sec.1, Hsin Tai Wu Rd., Hsichih,
Taipei Hsien 221, Taiwan, R.O.C.

Title: DDR Socket

Size: Custom | Document Number: Xplore Wildcat II | Rev: SB

Date: Monday, April 19, 2004 | Sheet 10 of 38

PLACE ONE 0.1 and ONE 0.01 CAP CLOSE TO EVERY 4
PULL-UP TERMINATION RESISTORS, CRB-P13
DATA(64)+ADD(13)+DQS(9)+CB(8)+CMD(13)=107
0.1UF 0402 X7R 59X

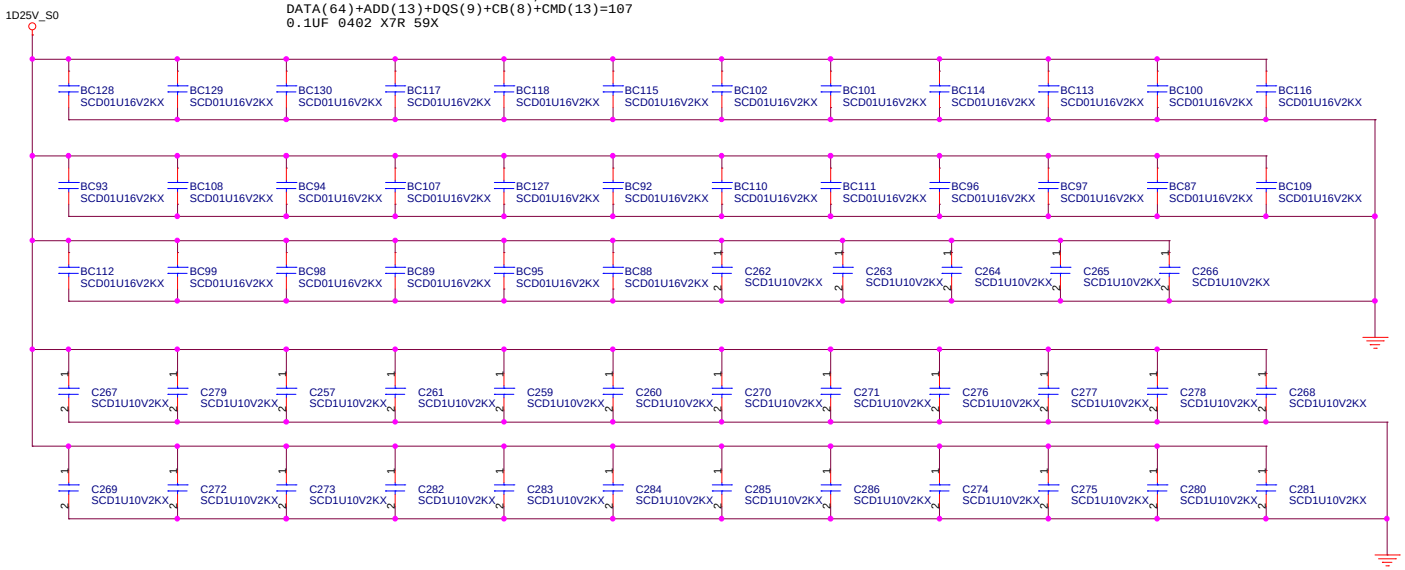

PLACE CAPS BETWEEN AND NEAR DDR SKTS
PLACE EACH 0.1UF CAP CLOSE TO POWER
PIN

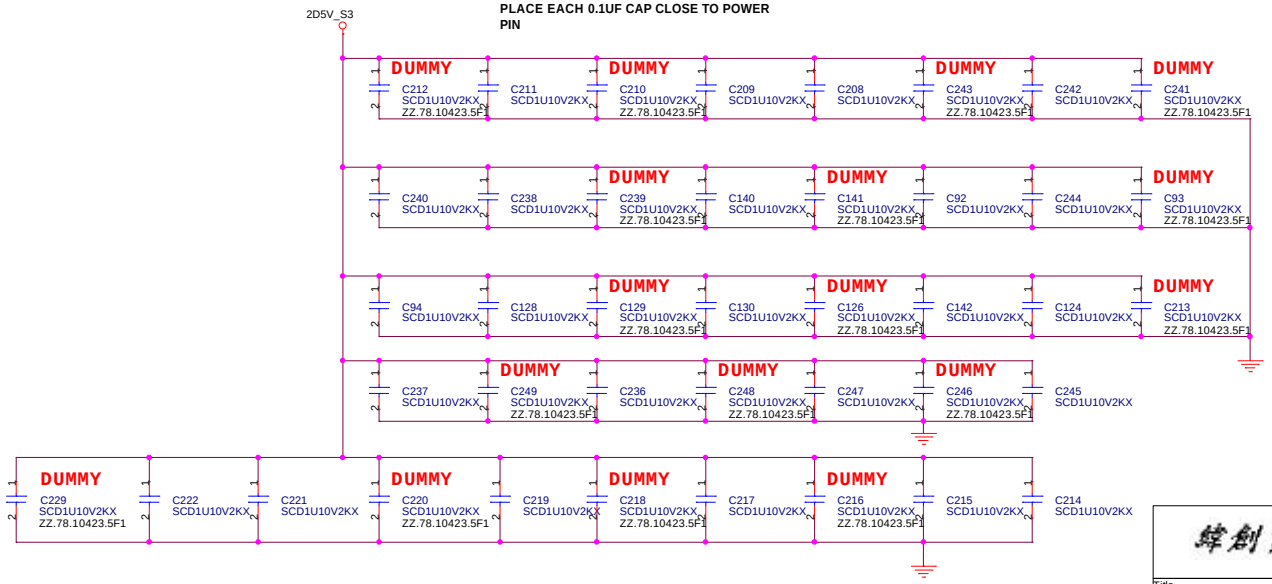

Wistron Corporation
21F, 88, Sec.1, Hsin Tai Wu Rd., Hsichih,
Taipei Hsien 221, Taiwan, R.O.C.

Title	DDR Decoupling Cap	
Size A3	Document Number Xplore Wildcat II	Rev SB
Date: Monday, April 19, 2004	Sheet 11 of 38	

SERIES DAMPING

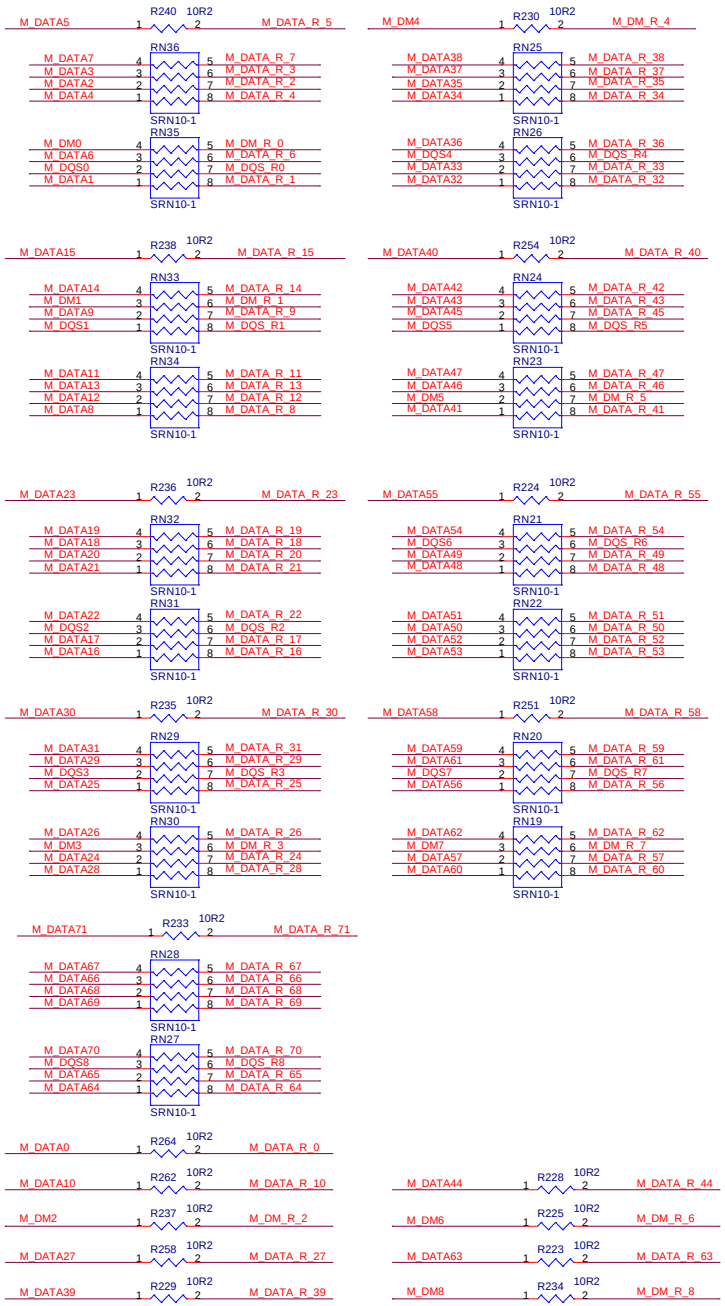

PARALLEL TERMINATION

Put decap near power(1.25V) and pull-up resistor

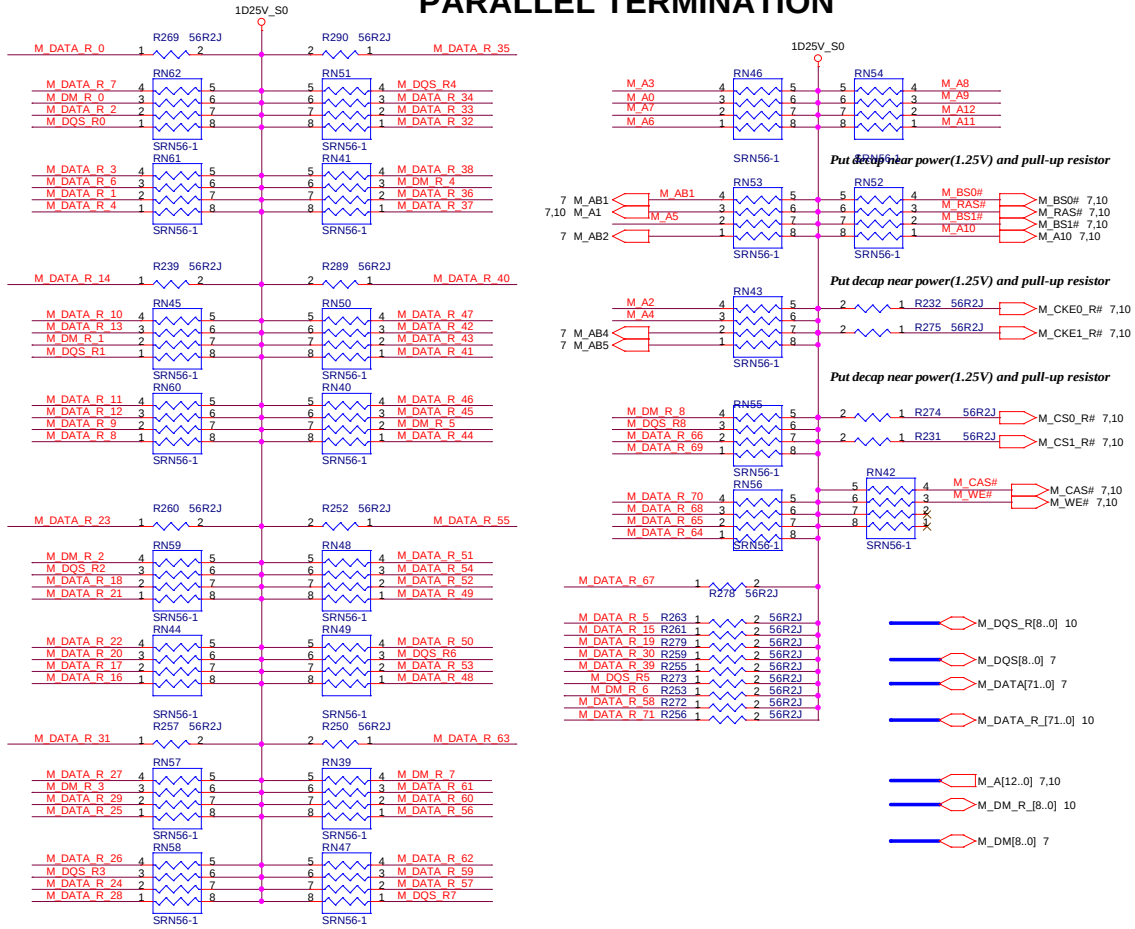

緯創資通	**Wistron Corporation** 21F, 88, Sec.1, Hsin Tai Wu Rd., Hsichih, Taipei Hsien 221, Taiwan, R.O.C.	
Title	DDR Terminator resistor array	
Size A3	Document Number Xplore Wildcat II	Rev SB
Date: Monday, April 19, 2004	Sheet 12 of 38	

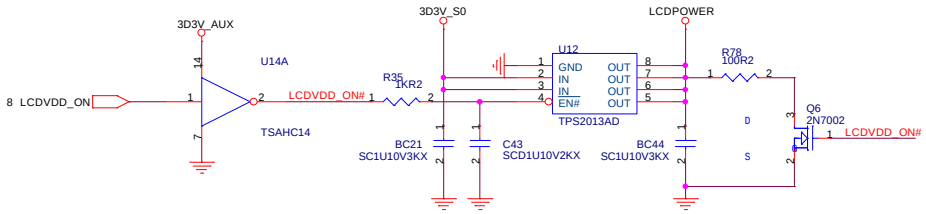

LCD Interface

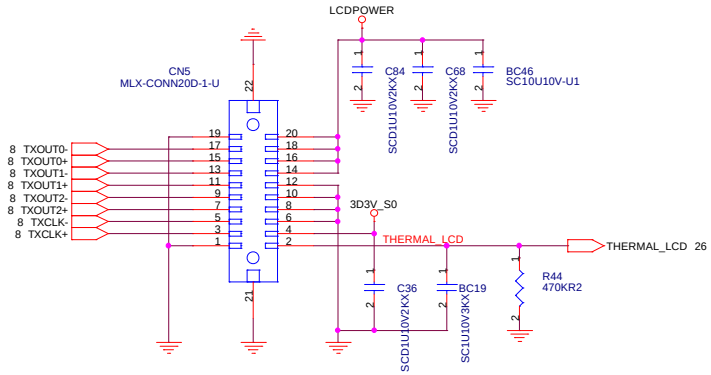

Inverter Interface

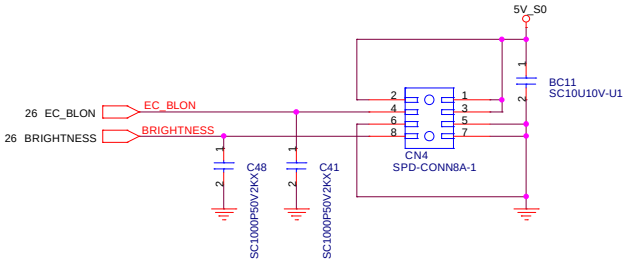

Antenna Switch Board Interface

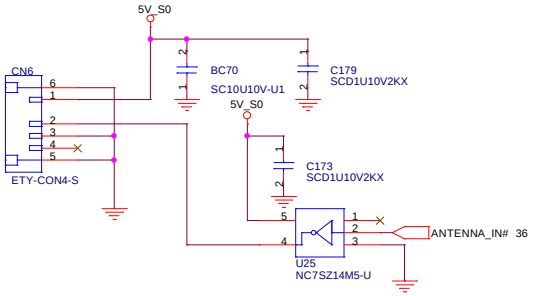

緯創資通	**Wistron Corporation** 21F, 88, Sec.1, Hsin Tai Wu Rd., Hsichih, Taipei Hsien 221, Taiwan, R.O.C.	
Title	LVDS Inverter Power	
Size A3	Document Number Xplore Wildcat II	Rev SB
Date: Monday, April 19, 2004	Sheet 13 of 38	

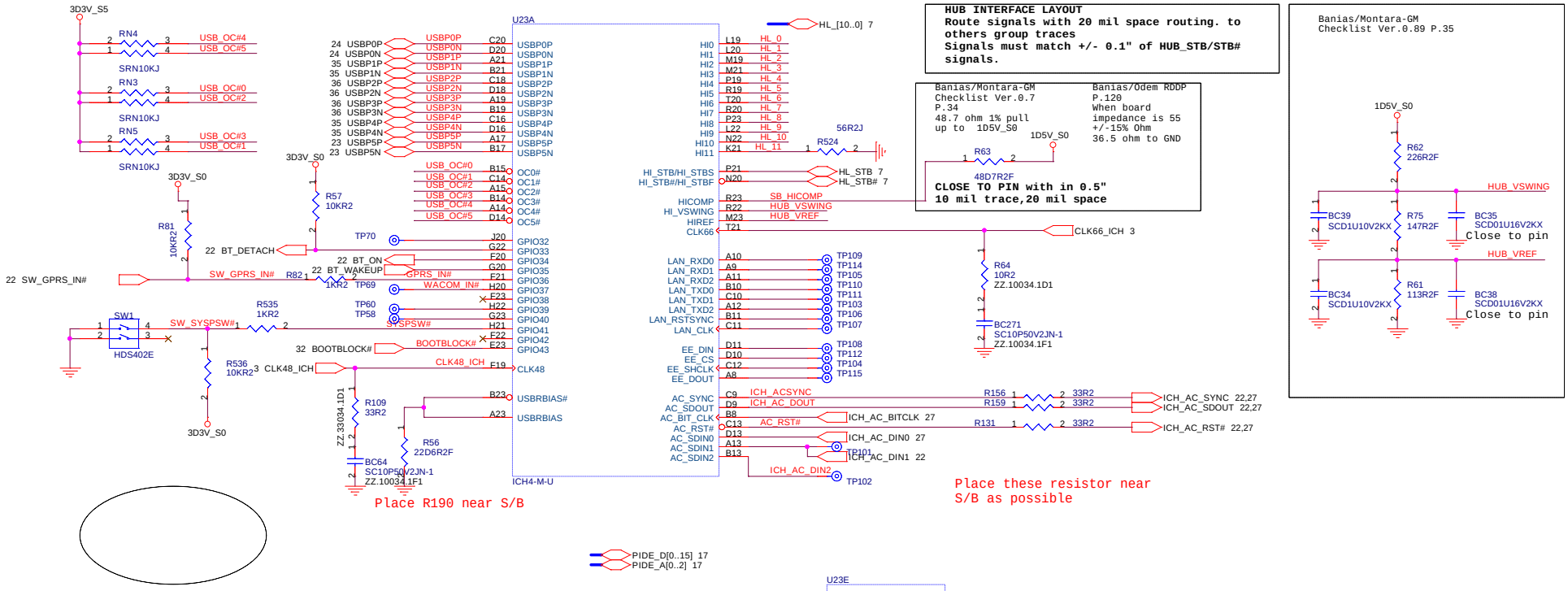

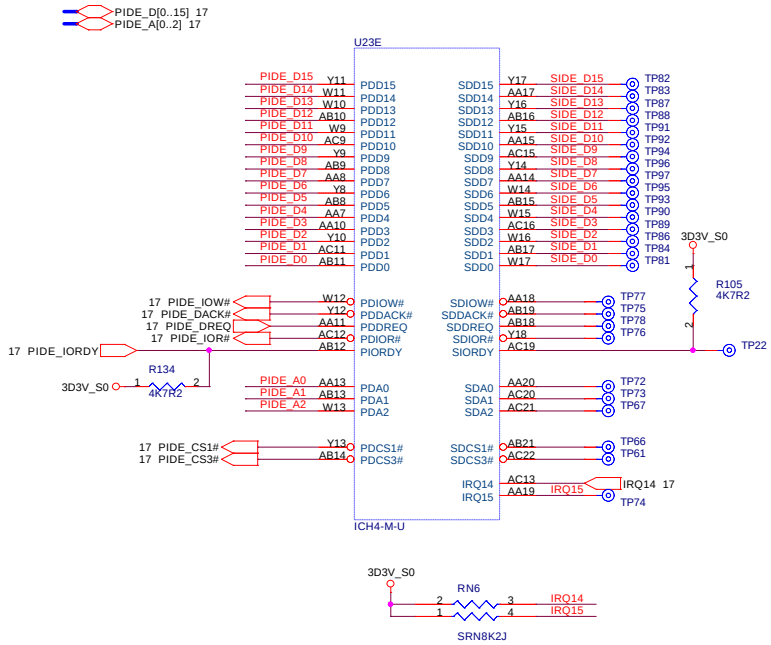

ICH4 Integrated Pull-up and Pull-down Resistors

ICH4 EDS 11450 1.1

EE_DIN, EE_DOUT, PME#, PWRBTN# GNT[B:A]#/GNT[5]#/GPIO[17:16], LAD[3:0]#/FWH[3:0]#, LDRQ[1:0],	ICH4 internal 20K pull-ups
LAN_RXD[2:0]	ICH4 internal 10K pull-ups
AC_BITCLK, AC_RST#, AC_SDIN[2:0], AC_SDOUT, AC_SYNC, DPRSLPVR, SPKR	ICH4 internal 20K pull-downs
USB[5:0][P,N]	ICH4 internal 15K pull-downs
PDD[7]/SDD[7], PDDREQ / SDDREQ	ICH4 internal 11.5K pull-downs
LANCLK	ICH4 internal 100K pull-downs

ICH4 IDE Integrated Series Termination Resistors

PDD[15:0],SDD[15:0],PDIOW#,SDIOW#, PDIOR#,PDIOW#,PDREQ,SDREQ, PDDACK#, SDDACK#, PIORDY,SIORDY, PDA[2:0],SDA[2:0], PDCS1#,SDCS1#, PDCS3#,SDCS3#,IRQ14,IRQ15,	approximately 33 ohm

Wistron Corporation
21F, 88, Sec.1, Hsin Tai Wu Rd., Hsichih, Taipei Hsien 221, Taiwan, R.O.C.

Title: ICH4-M(1/3)

Size: A3 | Document Number: Xplore Wildcat II | Rev: SB

Date: Monday, April 19, 2004 | Sheet 14 of 38

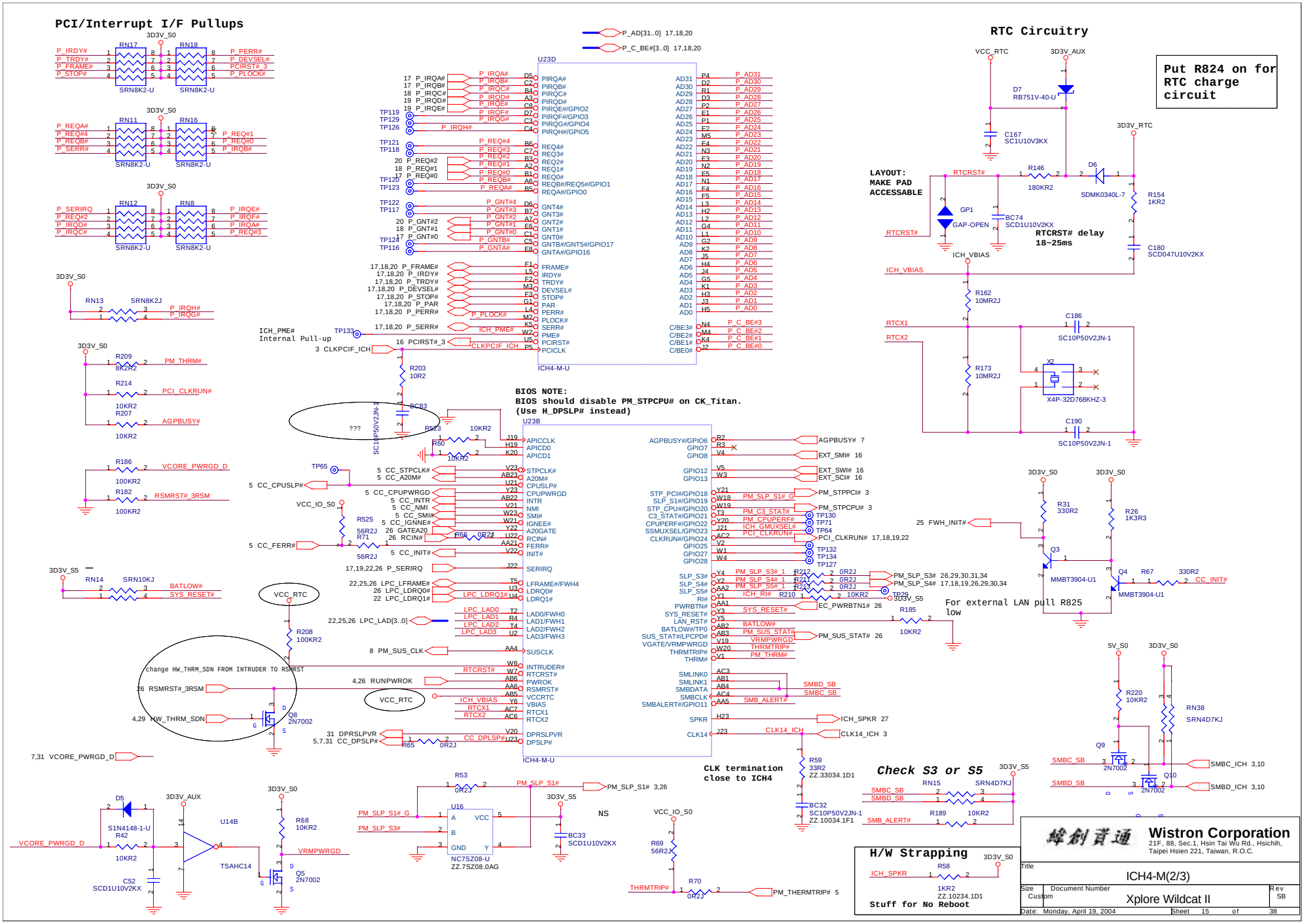
PCI/Interrupt I/F Pullups
RTC Circuitry
Put R824 on for RTC charge circuit
LAYOUT: MAKE PAD ACCESSABLE
RTCRST# delay 18~25ms
BIOS NOTE:
BIOS should disable PM_STPCPU# on CK_Titan.
(Use H_DPSLP# instead)
ICH_PME#
Internal Pull-up
change HW_THRM_SDN FROM INTRUDER TO RSMRST
CLK termination close to ICH4
Check S3 or S5
For external LAN pull R825 low
H/W Strapping
Stuff for No Reboot
Wistron Corporation
21F, 88, Sec.1, Hsin Tai Wu Rd., Hsichih, Taipei Hsien 221, Taiwan, R.O.C.
Title
ICH4-M(2/3)
Size Custom
Document Number
Xplore Wildcat II
Rev SB
Date: Monday, April 19, 2004
Sheet 15 of 38

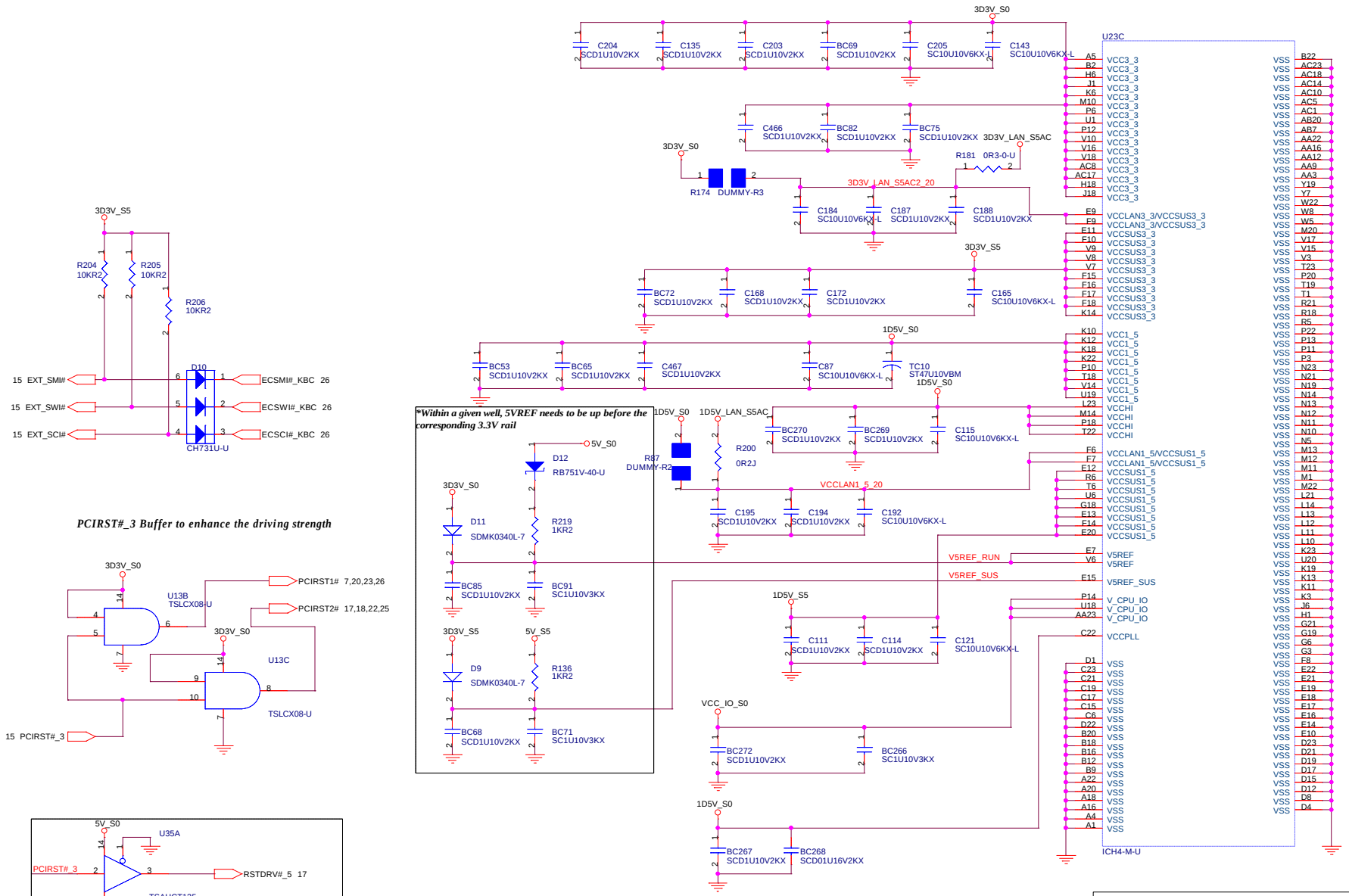

Wistron Corporation
21F, 88, Sec.1, Hsin Tai Wu Rd., Hsichih, Taipei Hsien 221, Taiwan, R.O.C.

Title: ICH4-M(3/3)

Size: A3 | Document Number: Xplore Wildcat II | Rev: SB

Date: Monday, April 19, 2004 | Sheet 16 of 38

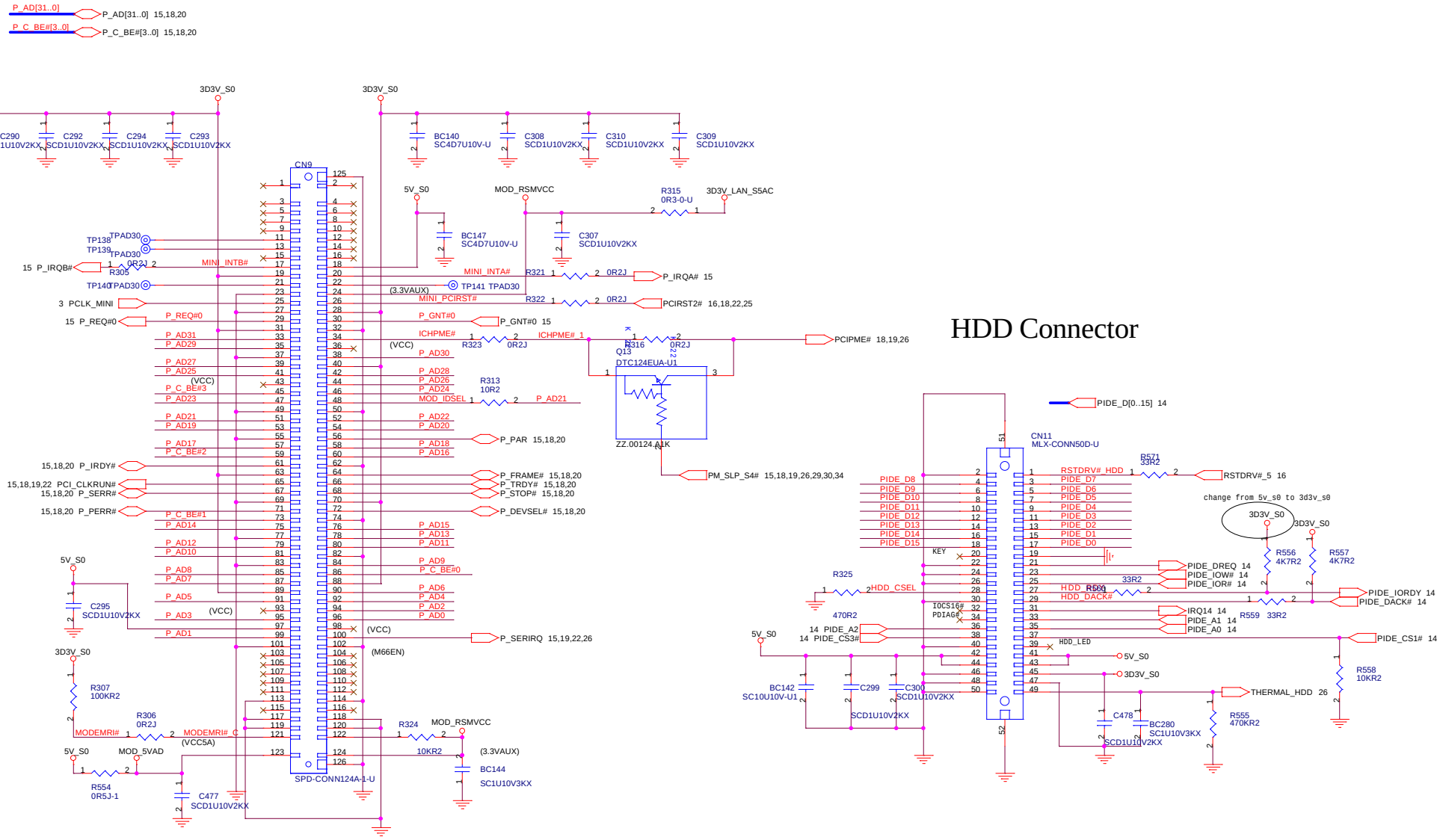

Wistron Corporation
21F, 88, Sec.1, Hsin Tai Wu Rd., Hsichih,
Taipei Hsien 221, Taiwan, R.O.C.

Title: Mini PCI Socket

Size: A3 | Document Number: Xplore Wildcat II | Rev: SB

Date: Monday, April 19, 2004 | Sheet 17 of 38

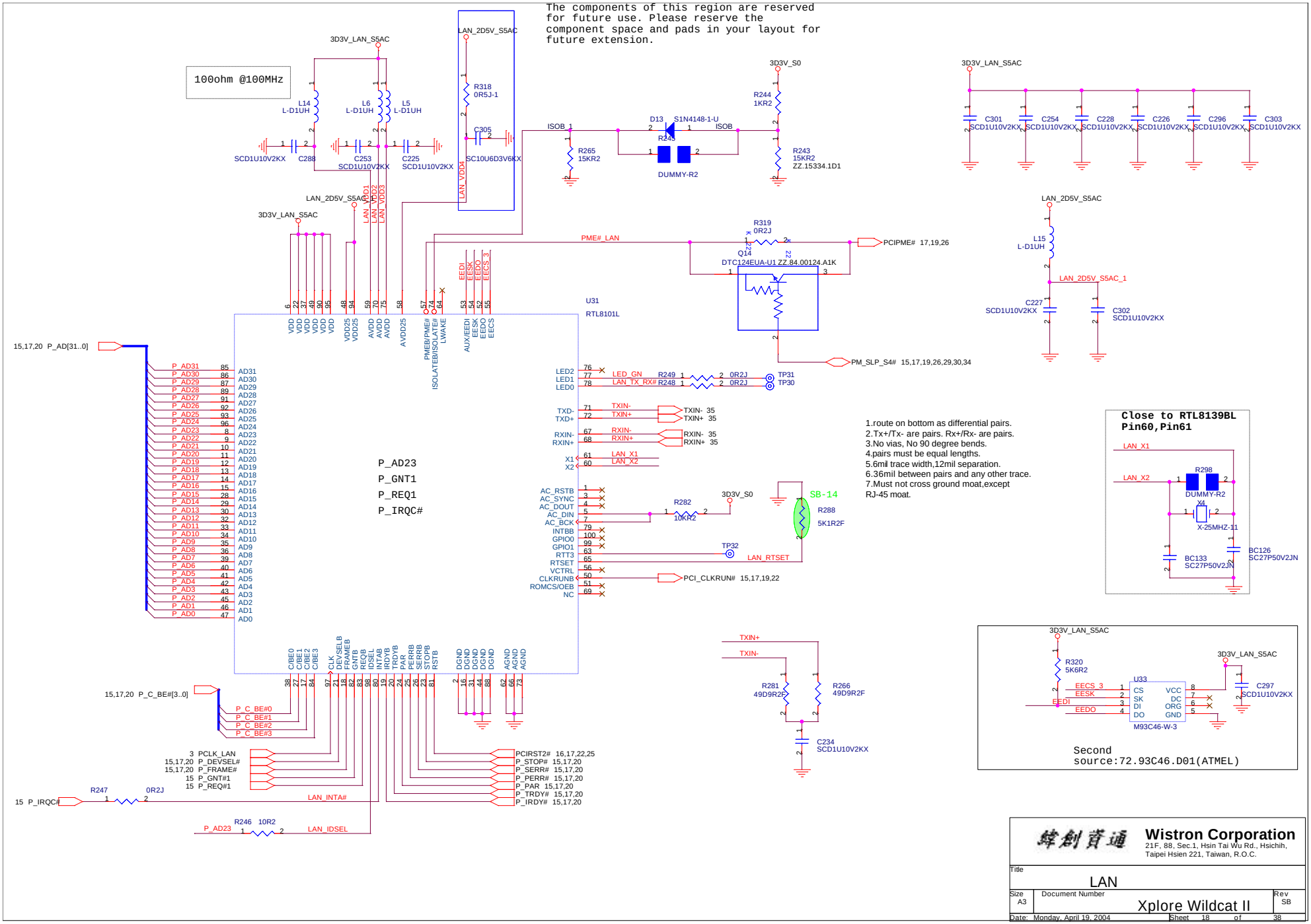

Wistron Corporation
21F, 88, Sec.1, Hsin Tai Wu Rd., Hsichih, Taipei Hsien 221, Taiwan, R.O.C.

Title	LAN	
Size A3	Document Number Xplore Wildcat II	Rev SB
Date: Monday, April 19, 2004	Sheet 18 of 38	

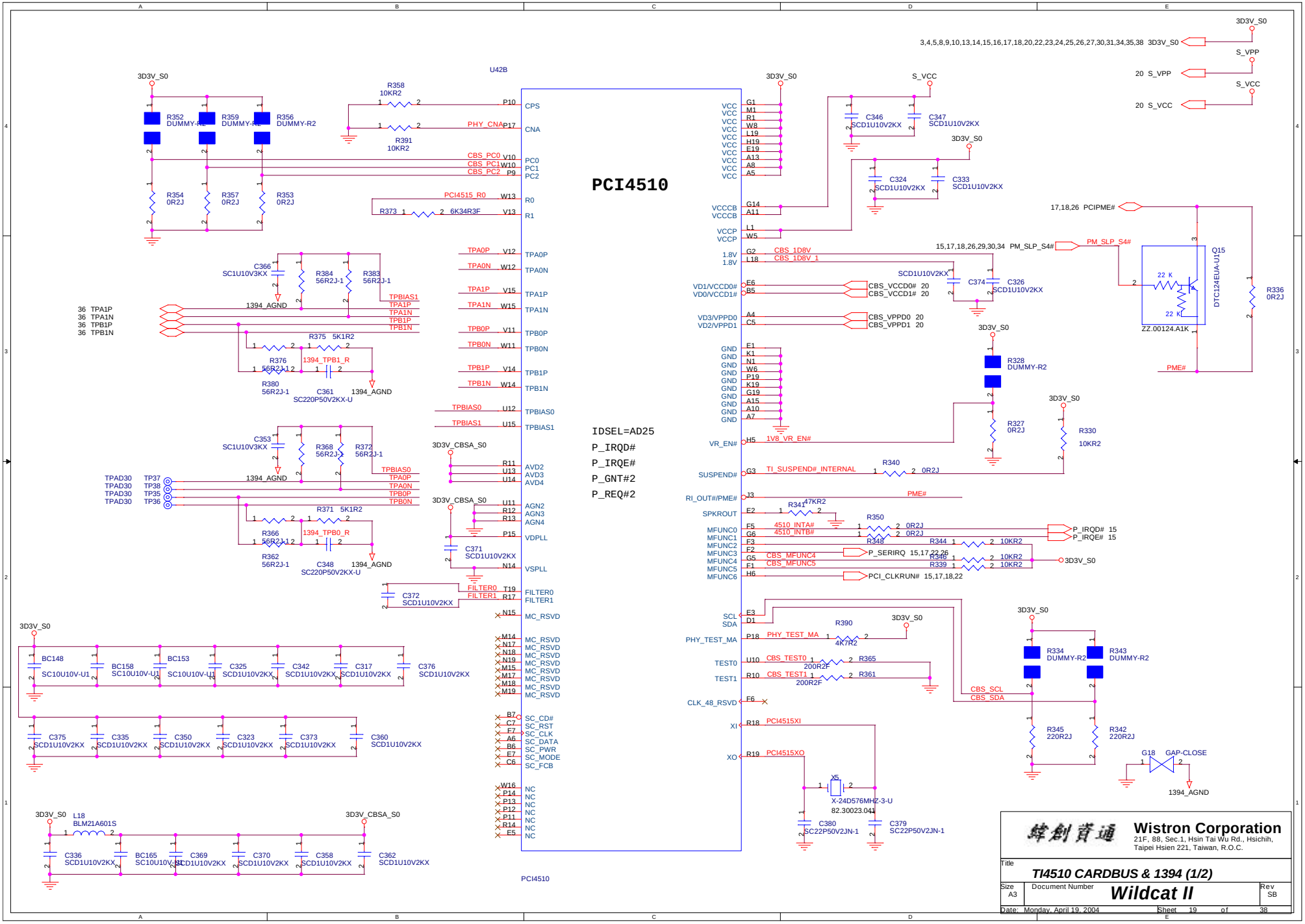
PCI4510
U42B
IDSEL=AD25
P_IRQD#
P_IRQE#
P_GNT#2
P_REQ#2
3D3V_S0
S_VCC
S_VPP
3,4,5,8,9,10,13,14,15,16,17,18,20,22,23,24,25,26,27,30,31,34,35,38 3D3V_S0
20 S_VPP
20 S_VCC
17,18,26 PCIPME#
15,17,18,26,29,30,34 PM_SLP_S4#
PM_SLP_S4#
Q15
DTC124EUA-U1
ZZ.00124.A1K
22 K
PME#
R336 0R2J
R328 DUMMY-R2
R327 0R2J
R330 10KR2
R340 0R2J
TI_SUSPEND#_INTERNAL
1V8_VR_EN#
PHY_CNA
CBS_PC0
CBS_PC1
CBS_PC2
PCI4515_R0
6K34R3F
TPA0P
TPA0N
TPA1P
TPA1N
TPB0P
TPB0N
TPB1P
TPB1N
TPBIAS0
TPBIAS1
1394_AGND
3D3V_CBSA_S0
TPAD30
TPAD30
TPAD30
TPAD30
TP37
TP38
TP35
TP36
36 TPA1P
36 TPA1N
36 TPB1P
36 TPB1N
1394_TPB1_R
1394_TPB0_R
SC220P50V2KX-U
FILTER0
FILTER1
MC_RSVD
SC_CD#
SC_RST
SC_CLK
SC_DATA
SC_PWR
SC_MODE
SC_FCB
NC
CBS_1D8V
CBS_1D8V_1
CBS_VCCD0# 20
CBS_VCCD1# 20
CBS_VPPD0 20
CBS_VPPD1 20
4510_INTA#
4510_INTB#
P_SERIRQ 15,17,22,26
CBS_MFUNC4
CBS_MFUNC5
PCI_CLKRUN# 15,17,18,22
P_IRQD# 15
P_IRQE# 15
PHY_TEST_MA
CBS_TEST0
CBS_TEST1
PCI4515XI
PCI4515XO
X-24D576MHZ-3-U
82.30023.041
CBS_SCL
CBS_SDA
R334 DUMMY-R2
R343 DUMMY-R2
R345 220R2J
R342 220R2J
G18 GAP-CLOSE
L18 BLM21A601S
R352 DUMMY-R2
R359 DUMMY-R2
R356 DUMMY-R2
R358 10KR2
R391 10KR2
R354 0R2J
R357 0R2J
R353 0R2J
R373 6K34R3F
R375 5K1R2
R371 5K1R2
R376 56R2J-1
R380 56R2J-1
R362 56R2J-1
R384 56R2J-1
R383 56R2J-1
R368 56R2J-1
R372 56R2J-1
C366 SC1U10V3KX
C353 SC1U10V3KX
C361 SC220P50V2KX-U
C348 SC220P50V2KX-U
C371 SCD1U10V2KX
C372 SCD1U10V2KX
C346 SCD1U10V2KX
C347 SCD1U10V2KX
C324 SCD1U10V2KX
C333 SCD1U10V2KX
C374 SCD1U10V2KX
C326 SCD1U10V2KX
C380 SC22P50V2JN-1
C379 SC22P50V2JN-1
BC148 SC10U10V-U1
BC158 SC10U10V-U1
BC153 SC10U10V-U1
C325 SCD1U10V2KX
C342 SCD1U10V2KX
C317 SCD1U10V2KX
C376 SCD1U10V2KX
C375 SCD1U10V2KX
C335 SCD1U10V2KX
C350 SCD1U10V2KX
C323 SCD1U10V2KX
C373 SCD1U10V2KX
C360 SCD1U10V2KX
C336 SCD1U10V2KX
BC165 SC10U10V-U1
C369 SCD1U10V2KX
C370 SCD1U10V2KX
C358 SCD1U10V2KX
C362 SCD1U10V2KX
Wistron Corporation
21F, 88, Sec.1, Hsin Tai Wu Rd., Hsichih, Taipei Hsien 221, Taiwan, R.O.C.
Title
TI4510 CARDBUS & 1394 (1/2)
Size A3
Document Number
Wildcat II
Rev SB
Date: Monday, April 19, 2004
Sheet 19 of 38

PCMCIA CONNECTOR

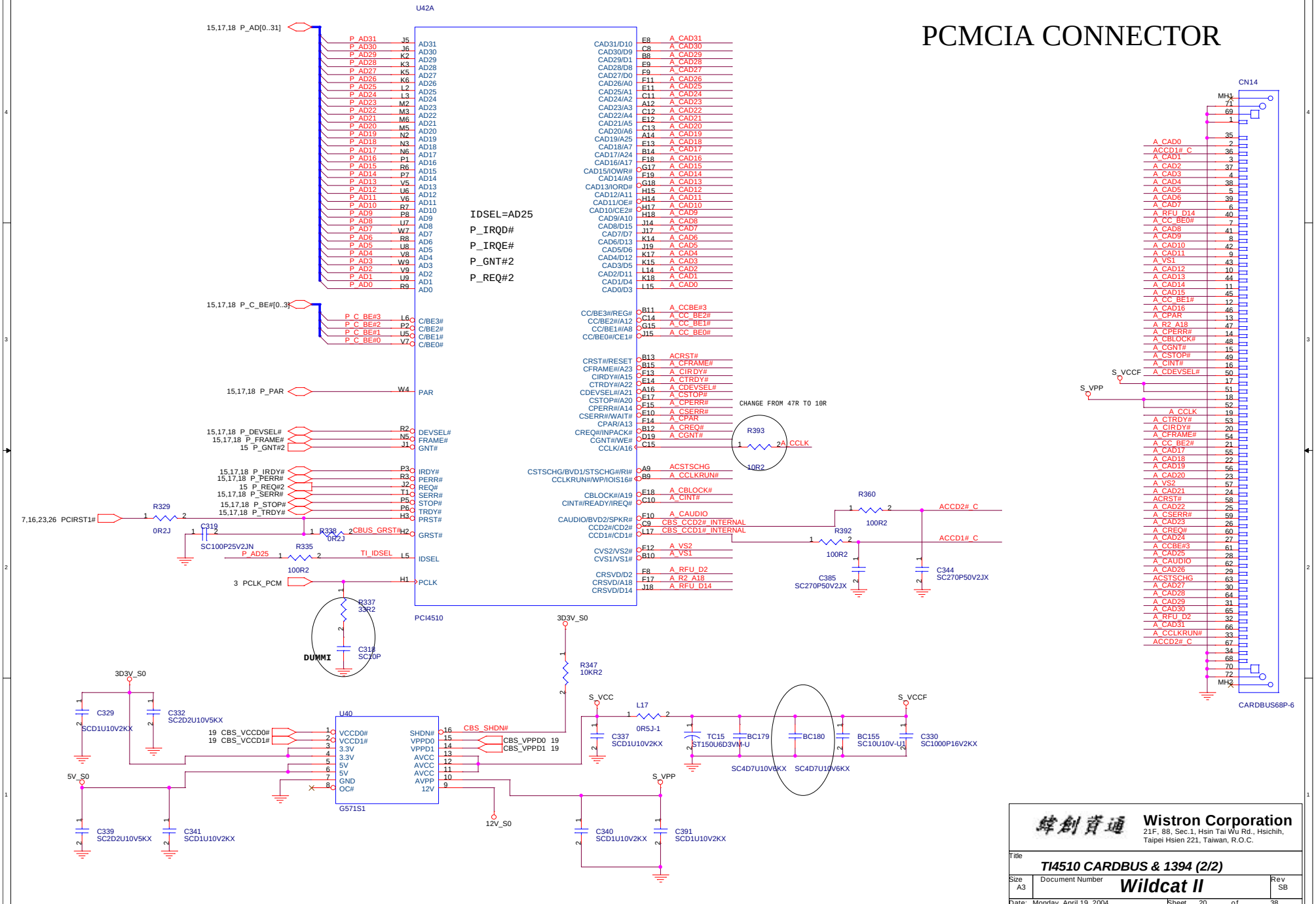

緯創資通	**Wistron Corporation** 21F, 88, Sec.1, Hsin Tai Wu Rd., Hsichih, Taipei Hsien 221, Taiwan, R.O.C.
Title	***TI4510 CARDBUS & 1394 (2/2)***
Size A3	Document Number ***Wildcat II*** Rev SB
Date: Monday, April 19, 2004	Sheet 20 of 38

緯創資通	**Wistron Corporation** 21F, 88, Sec.1, Hsin Tai Wu Rd., Hsichih, Taipei Hsien 221, Taiwan, R.O.C.
Title	***DUMMY PAGE***
Size: A2 / Document Number	***Wildcat II*** / Rev: SB
Date: Saturday, April 17, 2004	Sheet 21 of 38

RF Digitizer(SUPER I/O SERIAL PORT 2)

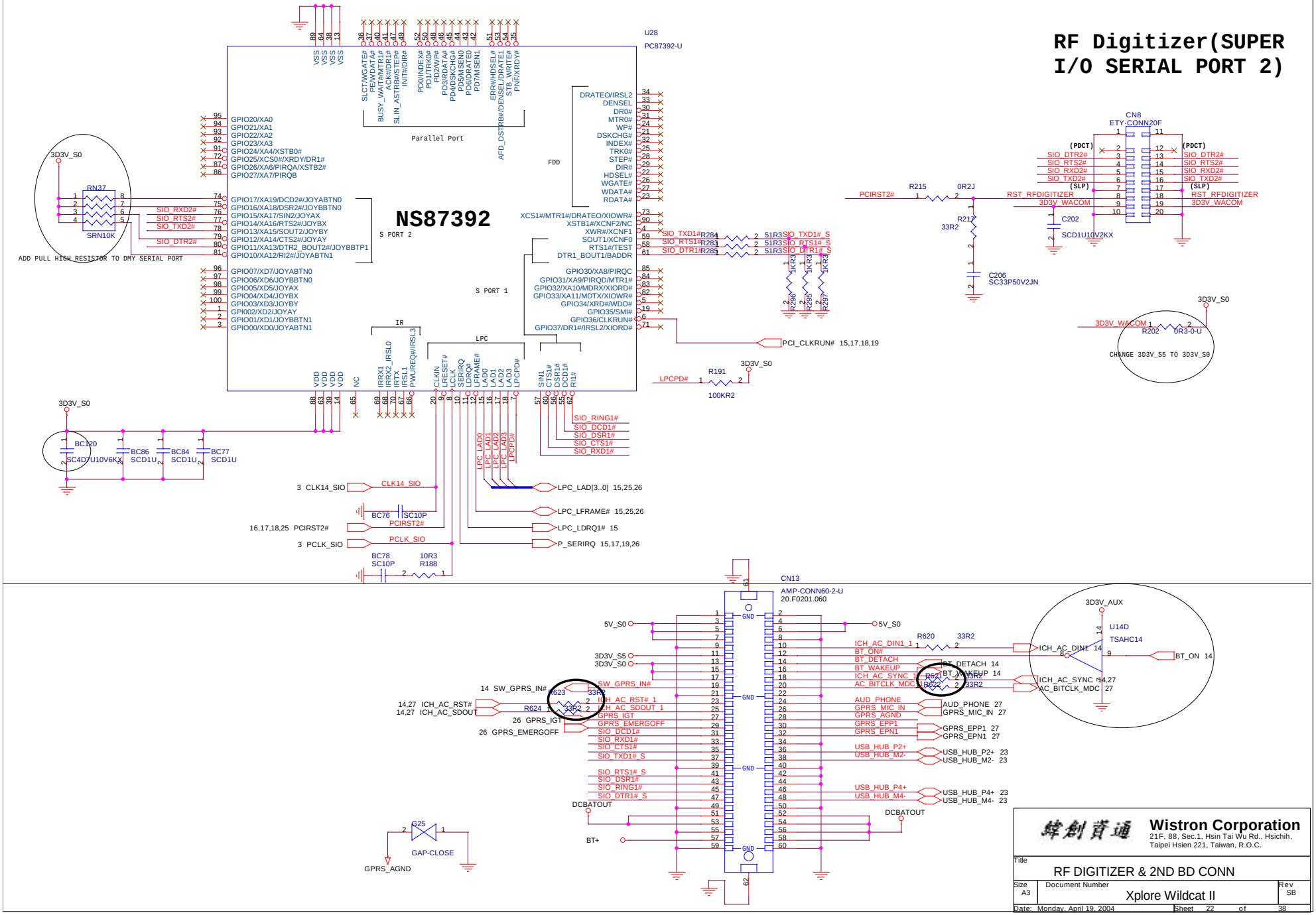

蜂創資通 **Wistron Corporation**
21F, 88, Sec.1, Hsin Tai Wu Rd., Hsichih,
Taipei Hsien 221, Taiwan, R.O.C.

Title	RF DIGITIZER & 2ND BD CONN	
Size A3	Document Number Xplore Wildcat II	Rev SB
Date: Monday, April 19, 2004	Sheet 22 of 38	

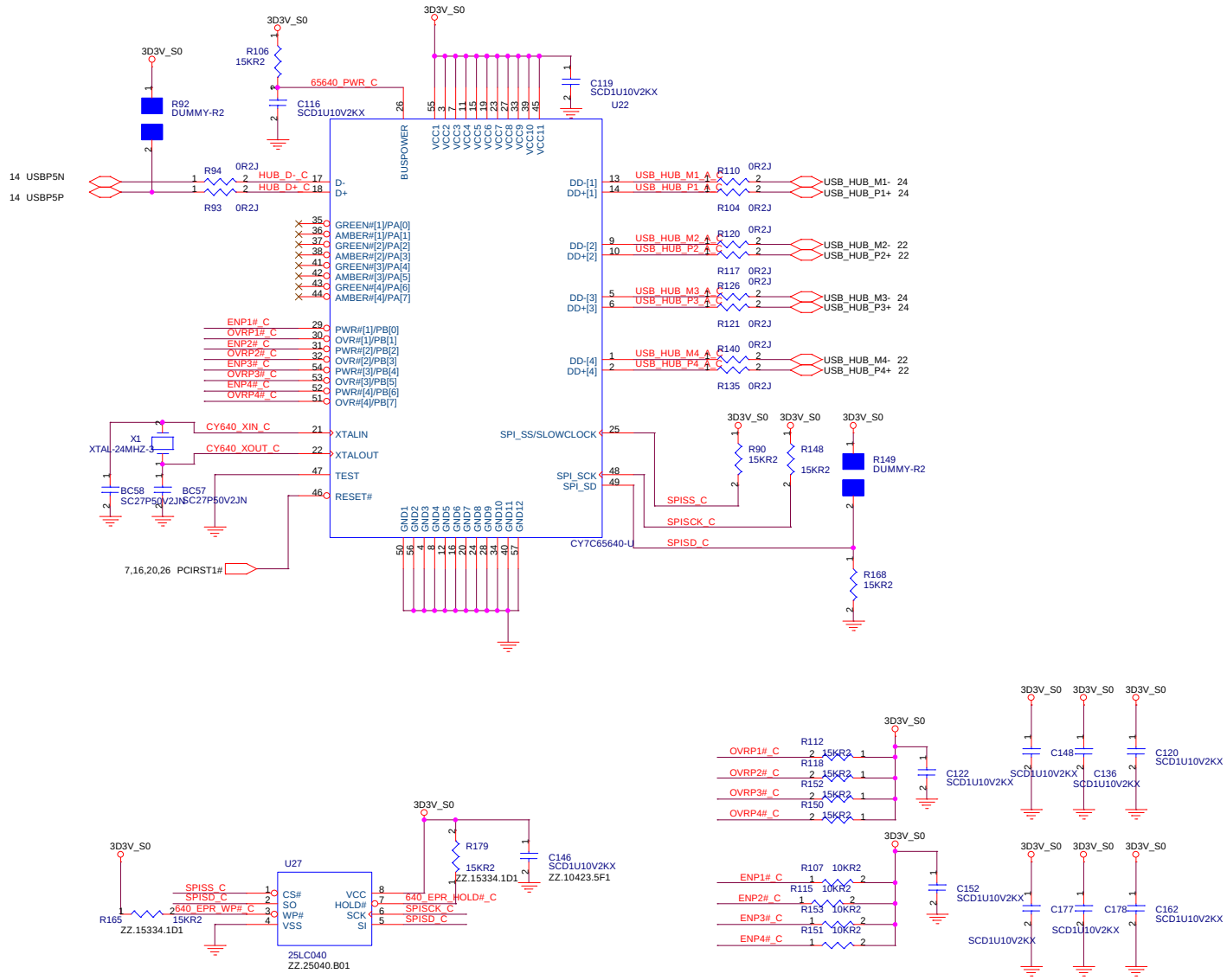

緯創資通	**Wistron Corporation** 21F, 88, Sec.1, Hsin Tai Wu Rd., Hsichih, Taipei Hsien 221, Taiwan, R.O.C.	
Title	USBHUB	
Size A3	Document Number Xplore Wildcat II	Rev SB
Date: Monday, April 19, 2004	Sheet 23 of 38	

KeyPAD Interface(Port0 of USB 2.0 With Lagacy Support)

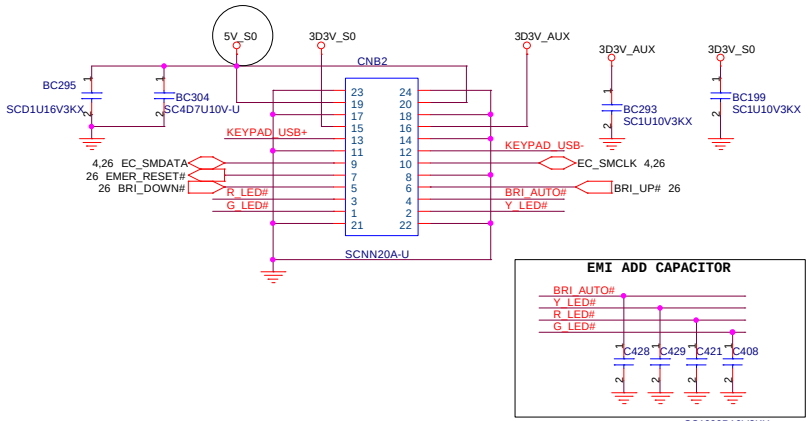

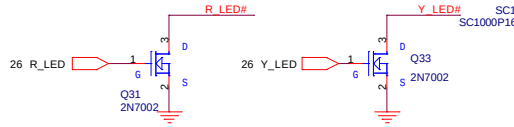

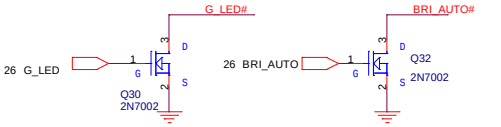

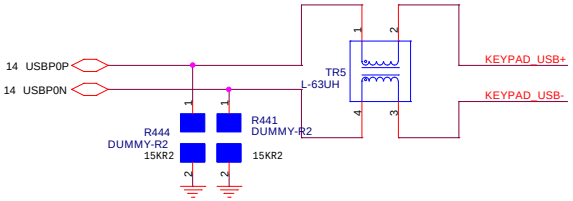

XPL Port2(USB HUB Port1 for USB 2.0/1.1)

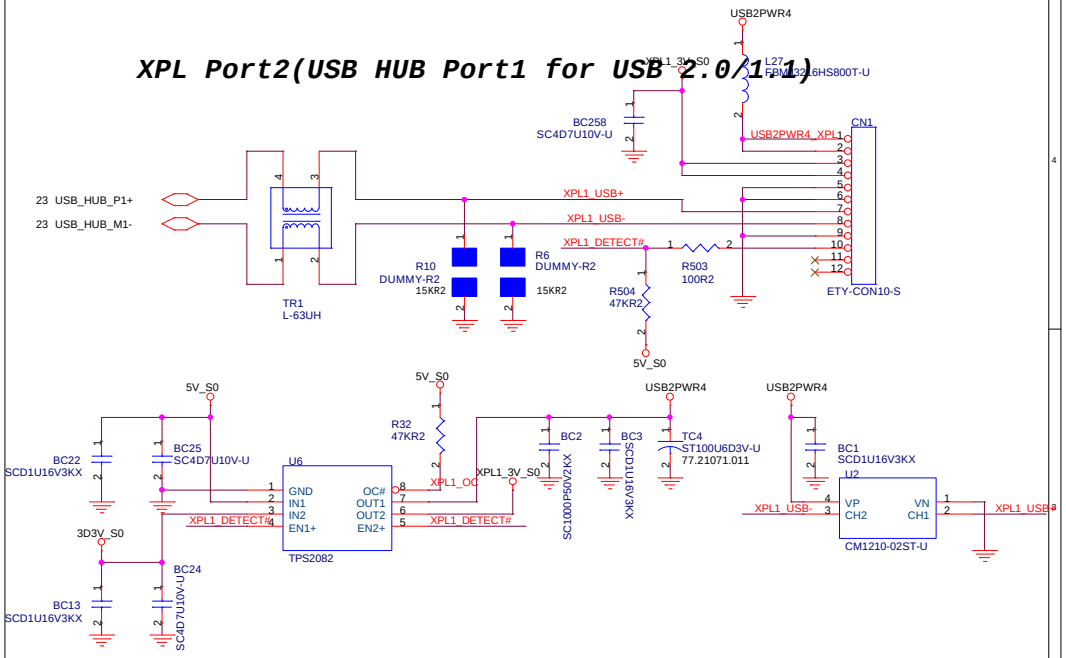

Resistive Digitizer(USB HUB Port3 for USB 2.0/1.1)

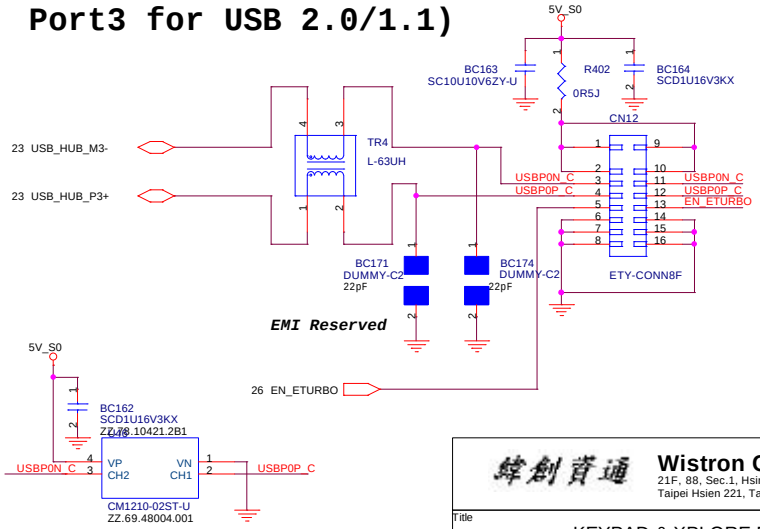

Wistron Corporation
21F, 88, Sec.1, Hsin Tai Wu Rd., Hsichih,
Taipei Hsien 221, Taiwan, R.O.C.

Title	KEYPAD & XPLORE PORT	
Size A3	Document Number Xplore Wildcat II	Rev SB
Date: Monday, April 19, 2004	Sheet 24 of 38	

KBC XD BIOS

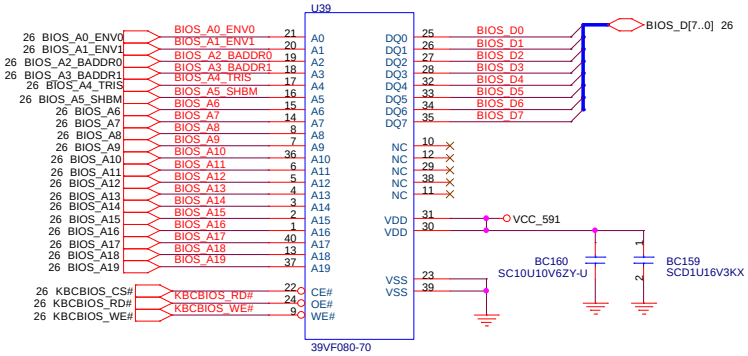

LPC DEBUG BD

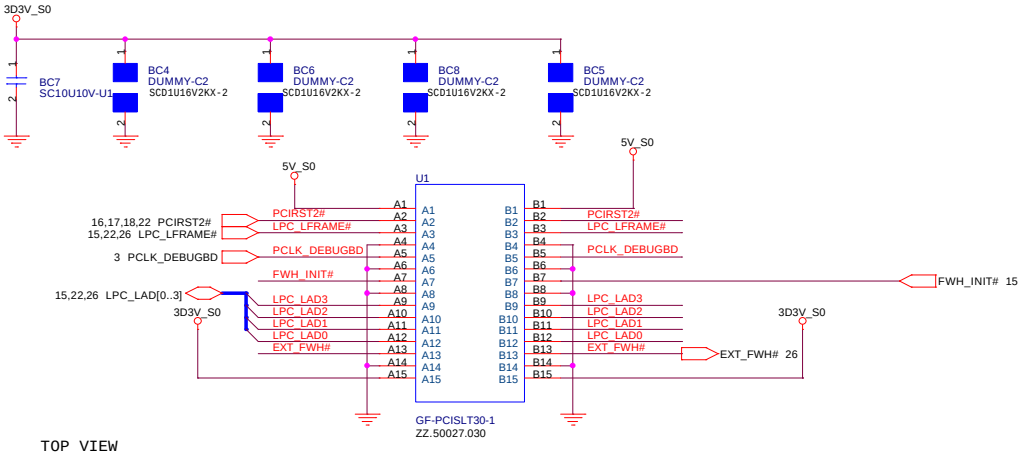

TOP VIEW

```
A15 (B1)
A14 (B2)
 .   .
 .   .
 .   .
A2  (B14)
A1  (B15)
```

(BOTTOM VIEW)

Wistron Corporation
21F, 88, Sec.1, Hsin Tai Wu Rd., Hsichih,
Taipei Hsien 221, Taiwan, R.O.C.

Title	BIOS ROM & LPC DEBUG PORT	
Size A3	Document Number Xplore Wildcat II	Rev SB
Date: Monday, April 19, 2004	Sheet 25 of 38	

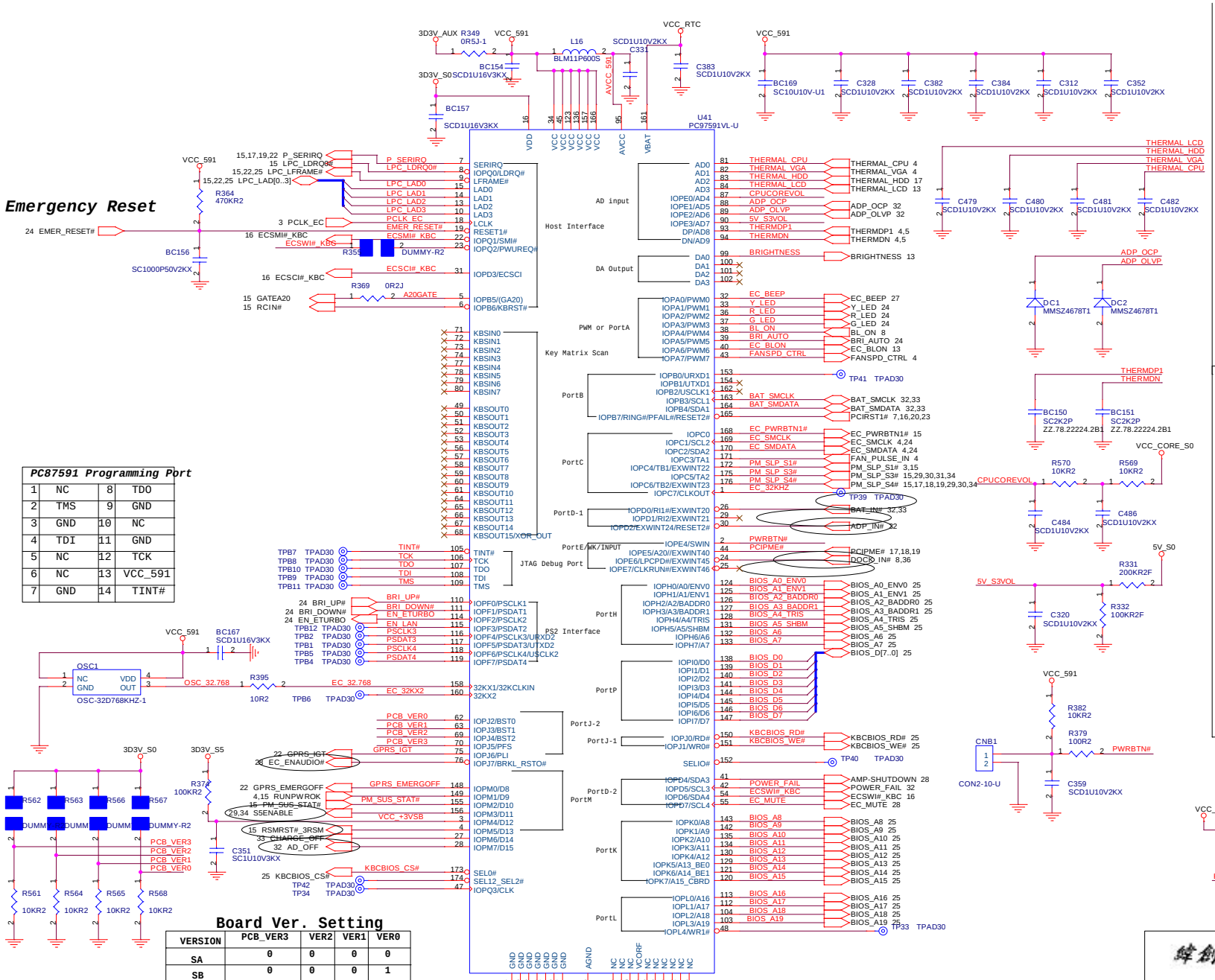

PC87591 Programming Port

1	NC	8	TDO
2	TMS	9	GND
3	GND	10	NC
4	TDI	11	GND
5	NC	12	TCK
6	NC	13	VCC_591
7	GND	14	TINT#

Board Ver. Setting

VERSION	PCB_VER3	VER2	VER1	VER0
SA	0	0	0	0
SB	0	0	0	1
SC	0	0	1	0
-1	0	0	1	1

KBC HARDWARE SETTING

	ENV0	ENV1	TRIS
IRE	0	0	0
OBD	0	1	0
DEV	1	0	0
PROG	1	1	0

SHBM=1: Enable shared memory with host BIOS
TRIS=1: While in IRE and OBD, float all the signals for clip-on ISE use

	I/O Address	
BADDR1-0	Index	Data
0 0	2E	2F
0 1	4E	4F
1 0	(HCFGBAH, HCFGBAL)	(HCFGBAH, HCFGBAL)+1
1 1	Reserved	

0915 CHENGE 3D3VS0

Wistron Corporation
21F, 88, Sec.1, Hsin Tai Wu Rd., Hsichih, Taipei Hsien 221, Taiwan, R.O.C.

Title: EC PC97591

Size: Custom | Document Number: Xplore Wildcat II | Rev: SB

Date: Monday, April 19, 2004 | Sheet 26 of 38

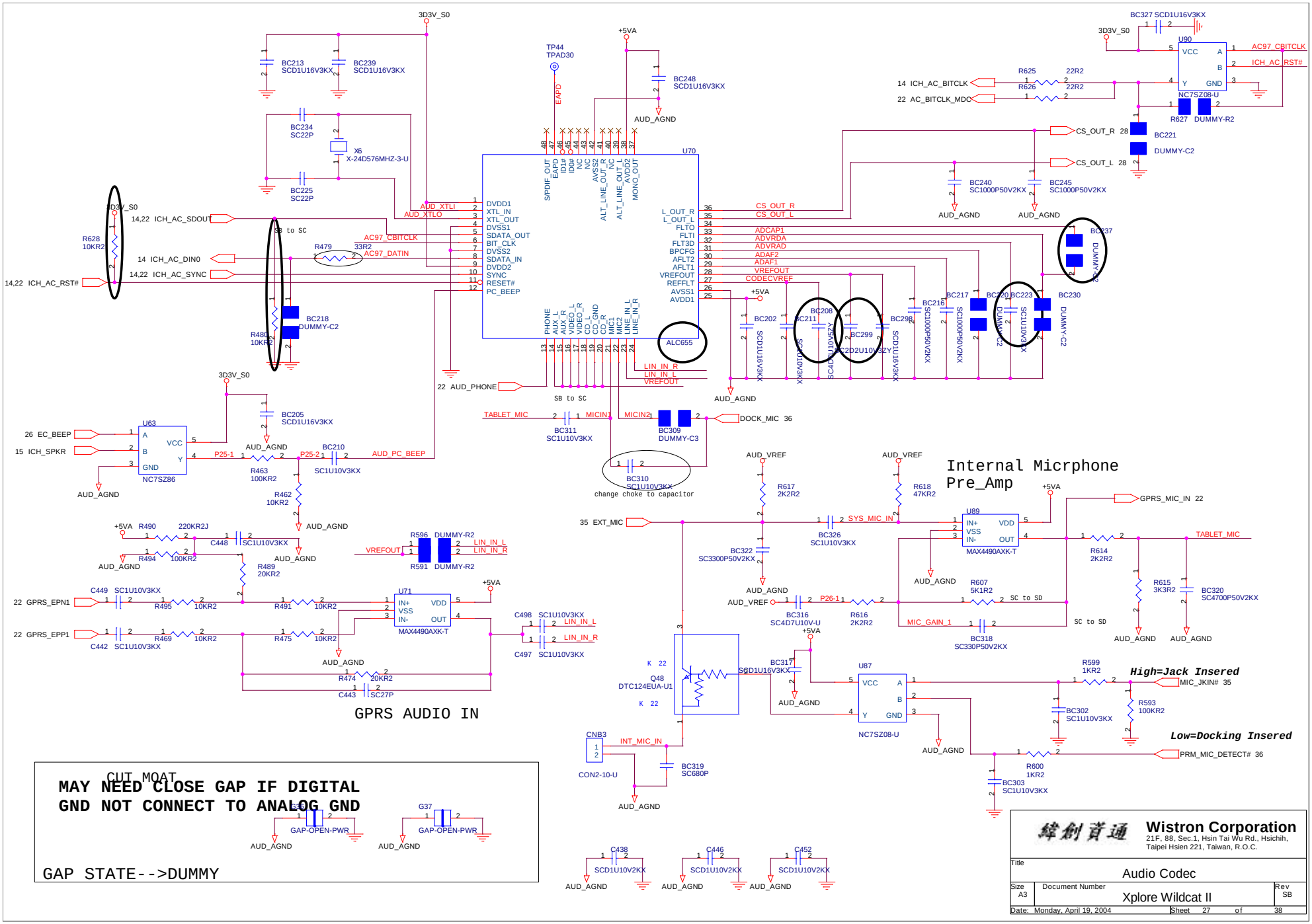

Wistron Corporation
21F, 88, Sec.1, Hsin Tai Wu Rd., Hsichih,
Taipei Hsien 221, Taiwan, R.O.C.

Title: Audio Codec

Size: A3 | Document Number: Xplore Wildcat II | Rev: SB

Date: Monday, April 19, 2004 | Sheet 27 of 38

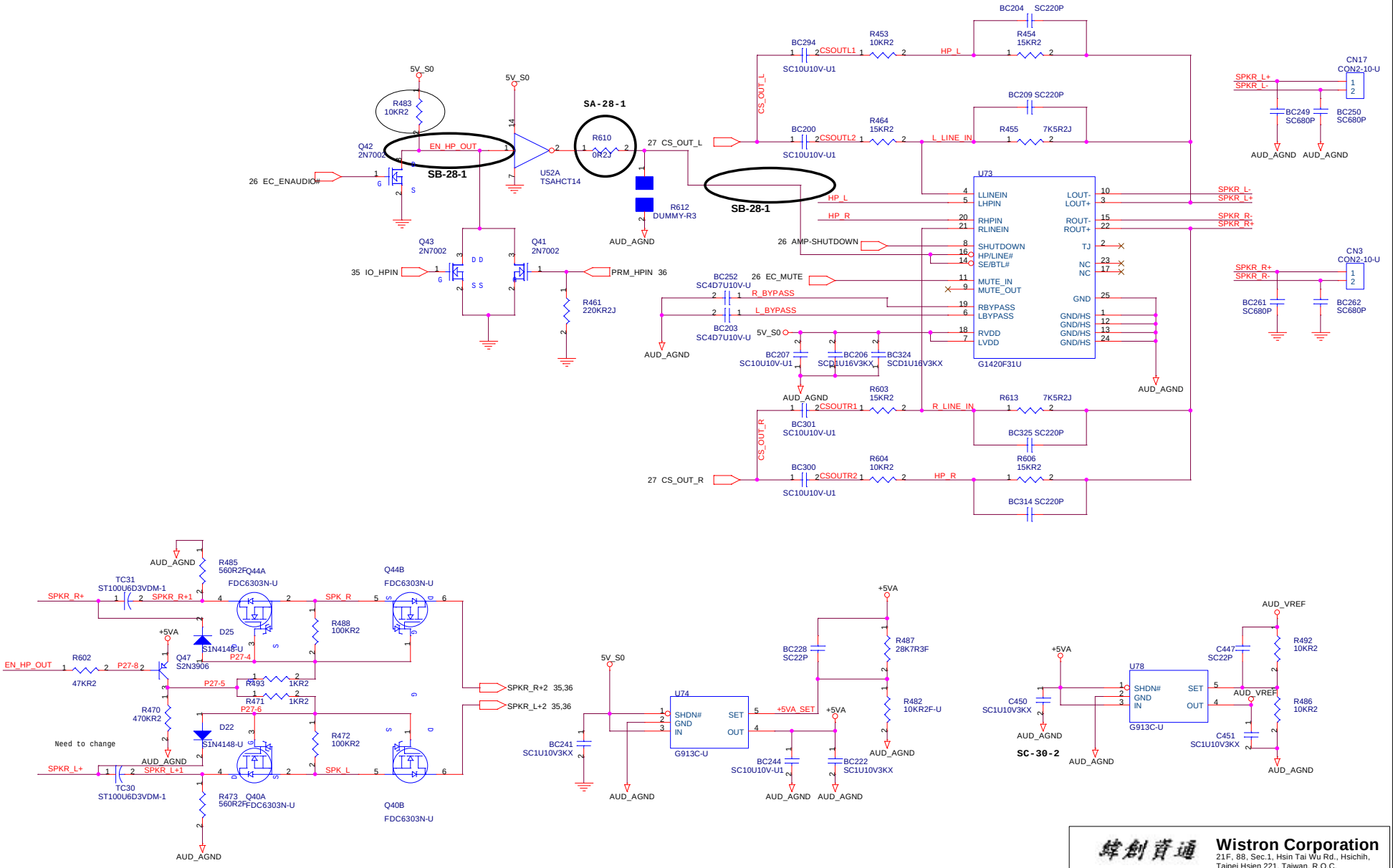

Wistron Corporation
21F, 88, Sec.1, Hsin Tai Wu Rd., Hsichih,
Taipei Hsien 221, Taiwan, R.O.C.

Title	AUDIO AMPLIFIER	
Size A3	Document Number Xplore Wildcat II	Rev SB
Date: Monday, April 19, 2004	Sheet 28 of 38	

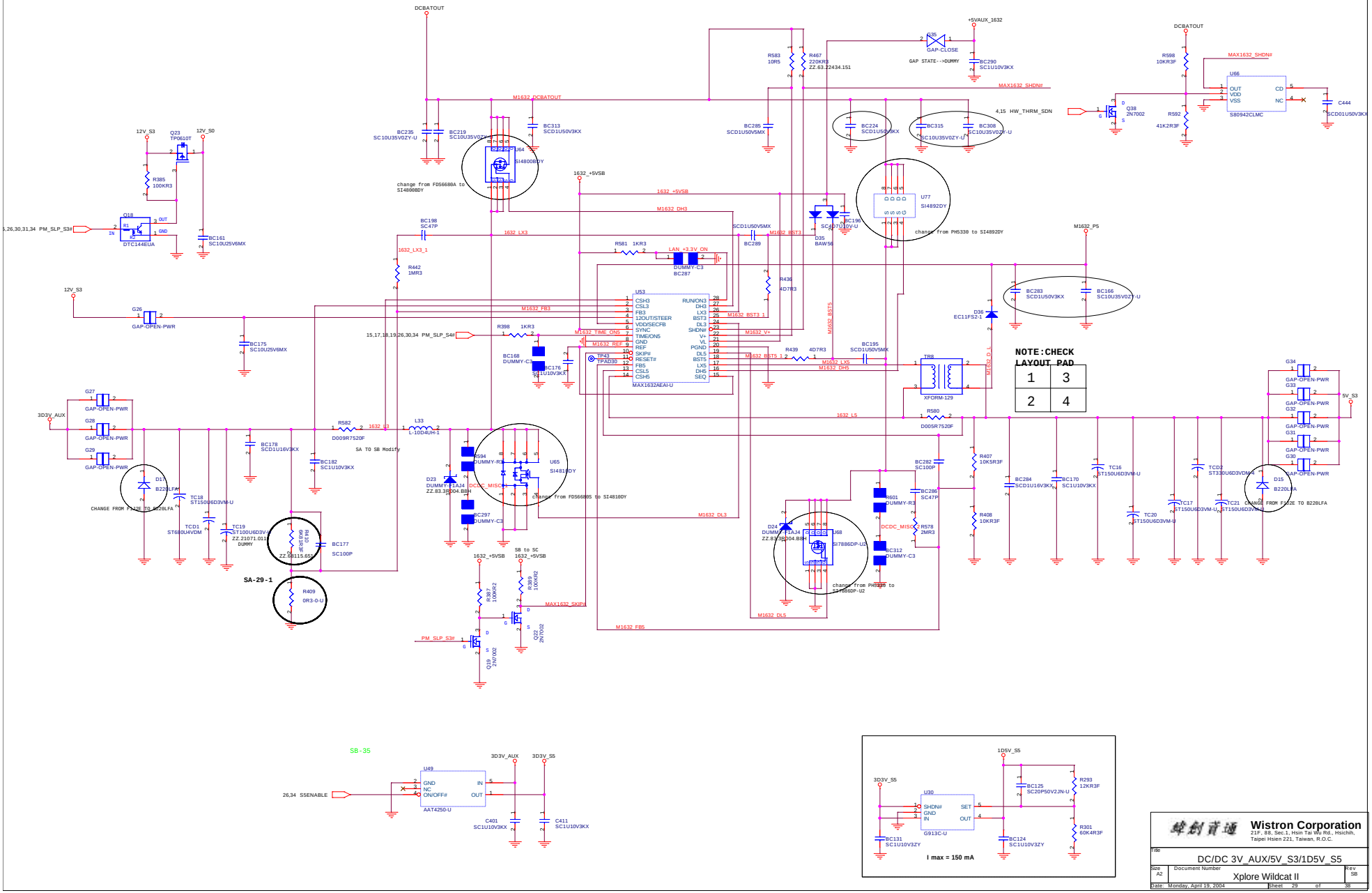
DCBATOUT
+5VAUX_1632
MAX1632_SHDN#
M1632_DCBATOUT
4,15 HW_THRM_SDN
12V_S3
12V_S0
Q23 TP0610T
R385 100KR3
Q18 DTC144EUA
BC161 SC10U25V6MX
change from FDS6680A to SI4800BDY
change from PH5330 to SI4892DY
1632_+5VSB
M1632_DH3
M1632_LX3
M1632_FB3
M1632_BST3
M1632_BST5
M1632_V+
M1632_LX5
M1632_DH5
M1632_DL5
M1632_FB5
M1632_P5
15,17,18,19,26,30,34 PM_SLP_S4#
U53 MAX1632AEAI-U
TR8 XFORM-129
D36 EC11FS2-1
NOTE:CHECK LAYOUT PAD
1 3
2 4
3D3V_AUX
5V_S3
1632_L3
1632_L5
SA TO SB Modify
CHANGE FROM F102E TO B220LFA
change from FDS6680S to SI4810DY
change from PH5330 to SI7886DP-U2
SA-29-1
SB to SC
MAX1632_SKIP#
PM_SLP_S3#
SB-35
26,34 S5ENABLE
U49 AAT4250-U
3D3V_AUX
3D3V_S5
C401 SC1U10V3KX
C411 SC1U10V3KX
1D5V_S5
U30 G913C-U
I max = 150 mA
Wistron Corporation
21F, 88, Sec.1, Hsin Tai Wu Rd., Hsichih, Taipei Hsien 221, Taiwan, R.O.C.
Title
DC/DC 3V_AUX/5V_S3/1D5V_S5
Size A2
Document Number
Xplore Wildcat II
Rev SB
Date: Monday, April 19, 2004
Sheet 29 of 38

SYSTEM DC/DC (1D2V/1D25V/1D5V)_S0, 2D5V_S3, VCC_IO_S0

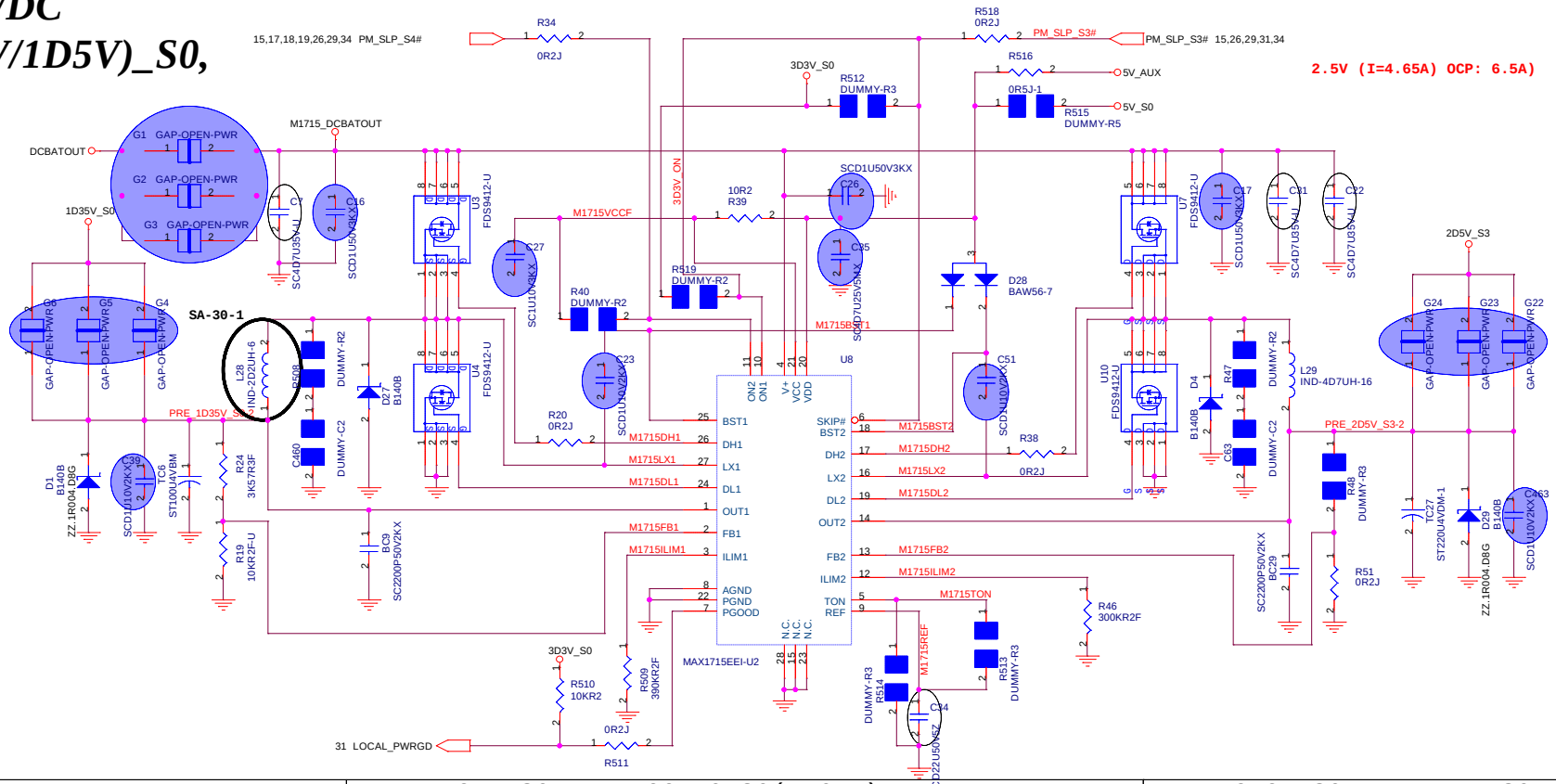

2D5V_S3 ¡÷ 1D25V_S0

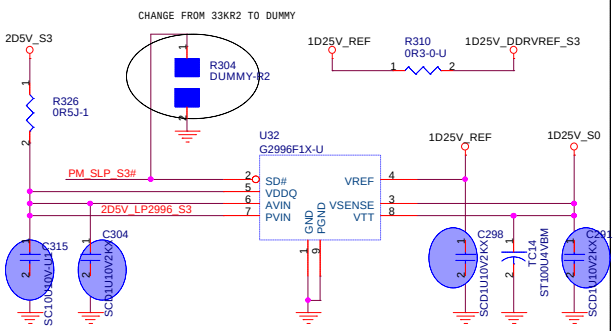

1D35V_S0 ¡÷ VCC_IO_S0(1.05V)

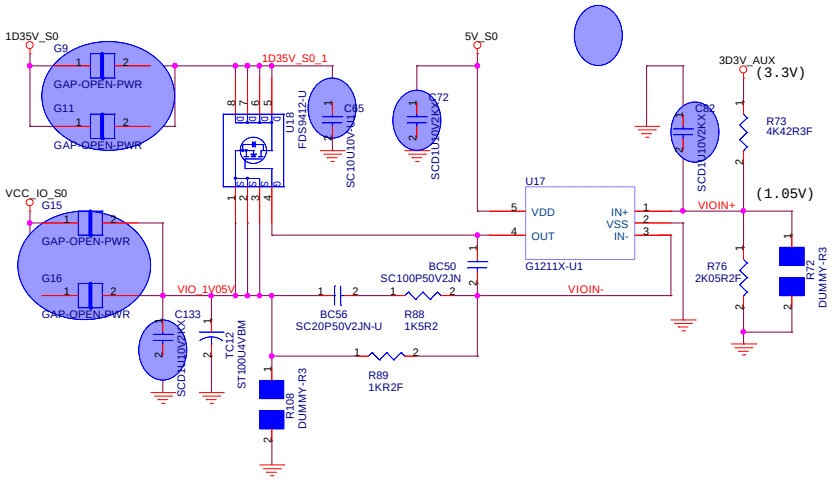

3D3V_S0 ¡÷ 1D5V_S0

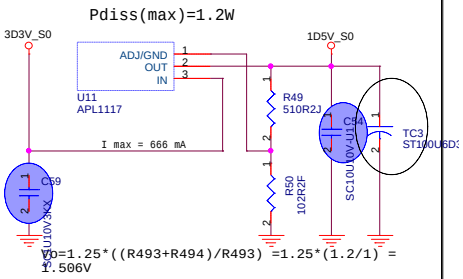

蜂創資通 Wistron Corporation
21F, 88, Sec.1, Hsin Tai Wu Rd., Hsichih, Taipei Hsien 221, Taiwan, R.O.C.

Title	2D5V/1D25V_S3/VCC_IO/1D5V_S0	
Size A3	Document Number Xplore Wildcat II	Rev SB
Date: Monday, April 19, 2004	Sheet 30 of 38	

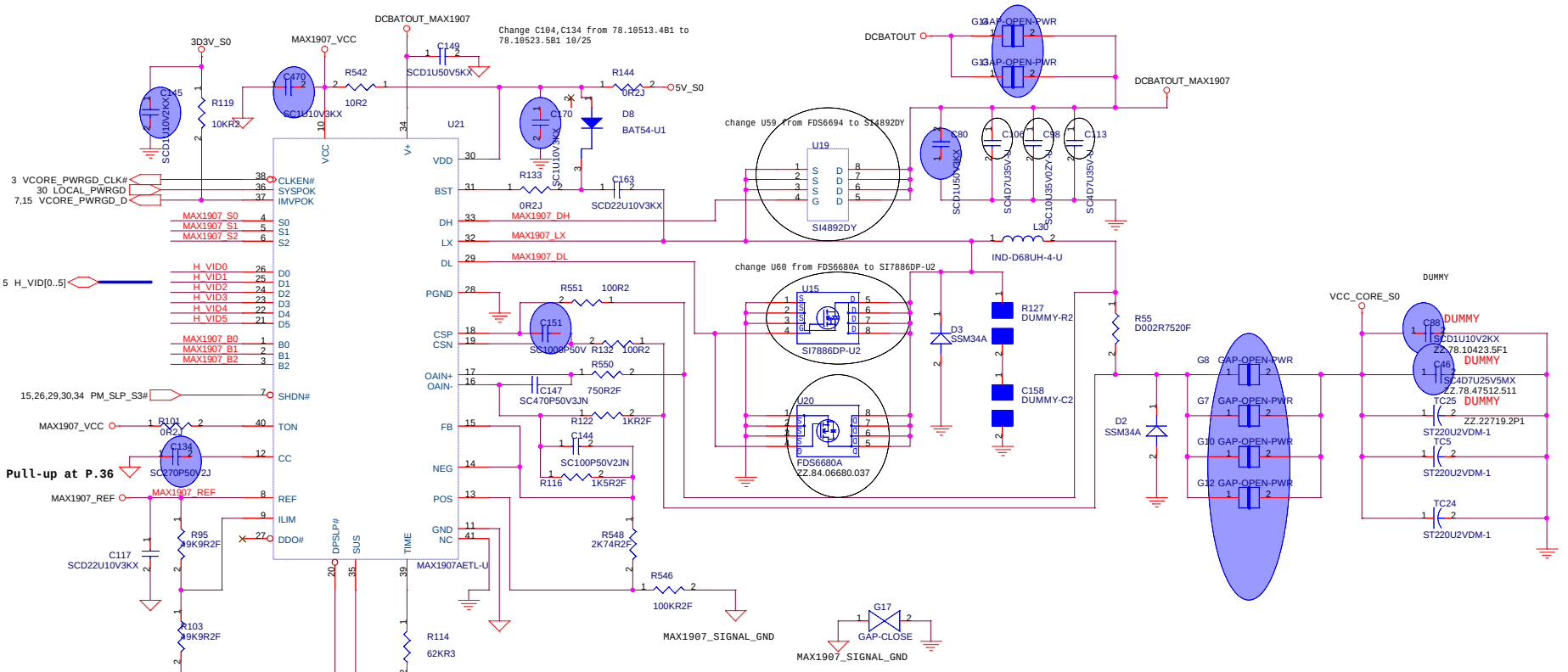

VID						Vcore
VID5	VID4	VID3	VID2	VID1	VID0	V
1	0	1	1	0	0	1.004
1	0	1	1	0	1	0.988
1	0	1	1	1	0	0.972
1	0	1	1	1	1	0.956
1	1	0	0	0	0	0.940
1	1	0	0	0	1	0.924
1	1	0	0	1	0	0.908
1	1	0	0	1	1	0.892
1	1	0	1	0	0	0.876
1	1	0	1	0	1	0.860
1	1	0	1	1	0	0.844

Wistron Corporation
21F, 88, Sec.1, Hsin Tai Wu Rd., Hsichih,
Taipei Hsien 221, Taiwan, R.O.C.

Title: VCORE Power-MAX-1907

Size: A3 | Document Number: Xplore Wildcat II | Rev: SB

Date: Monday, April 19, 2004 | Sheet 31 of 38

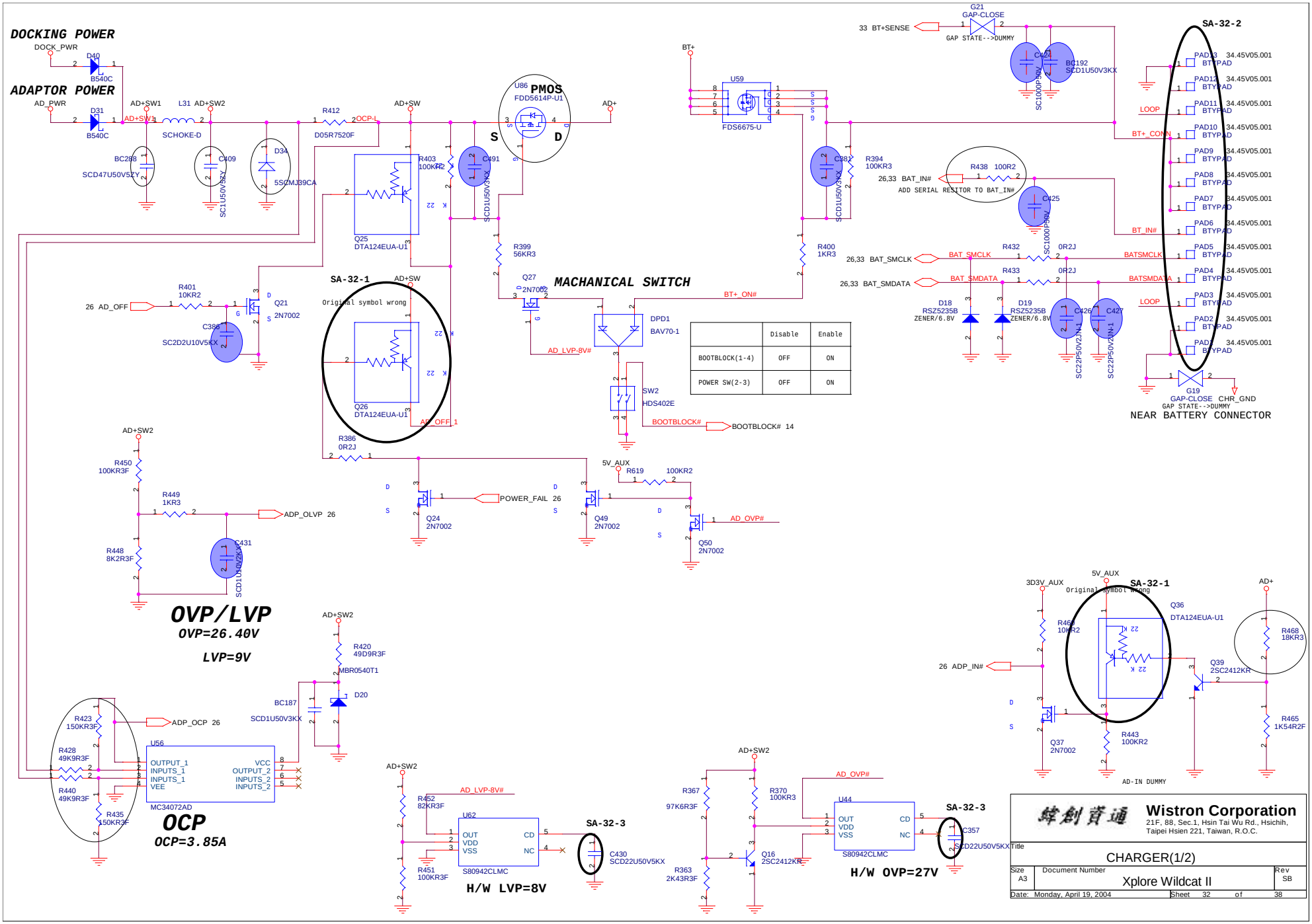

	Disable	Enable
BOOTBLOCK(1-4)	OFF	ON
POWER SW(2-3)	OFF	ON

Wistron Corporation
21F, 88, Sec.1, Hsin Tai Wu Rd., Hsichih,
Taipei Hsien 221, Taiwan, R.O.C.

Title: CHARGER(1/2)

Size	Document Number	Rev
A3	Xplore Wildcat II	SB

Date: Monday, April 19, 2004 Sheet 32 of 38

```
Imax=Vcls/(20*Rsense)
    =Vref*124K/(75K+124K)/(20*Rsense)
    =4.096V*0.623/(20*0.04)
    =3.2A
```

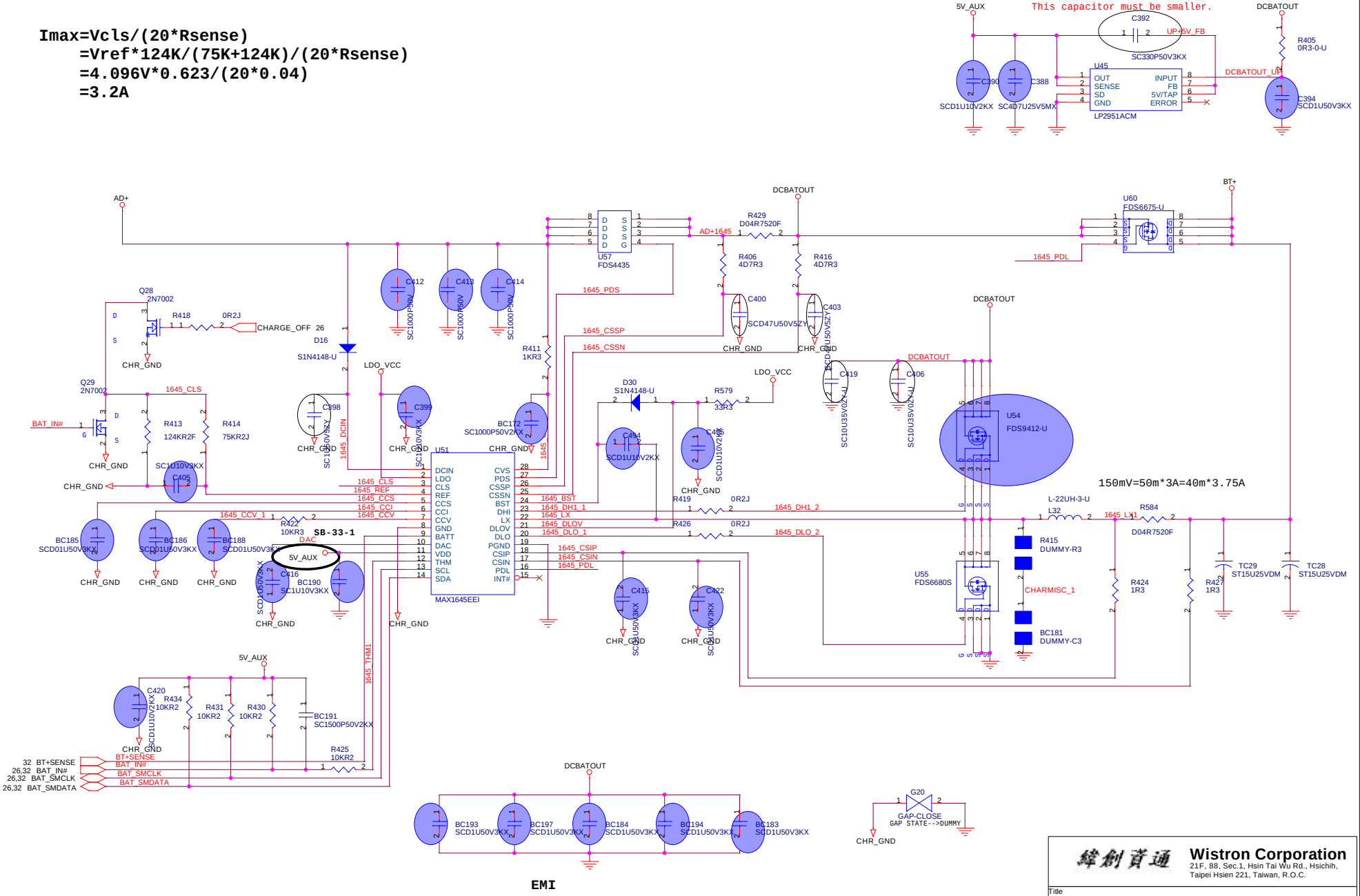

緯創資通	**Wistron Corporation** 21F, 88, Sec.1, Hsin Tai Wu Rd., Hsichih, Taipei Hsien 221, Taiwan, R.O.C.
Title	CHARGER(2/2)
Size A3	Document Number: Xplore Wildcat II — Rev SB
Date: Monday, April 19, 2004	Sheet 33 of 38

Suspend Power

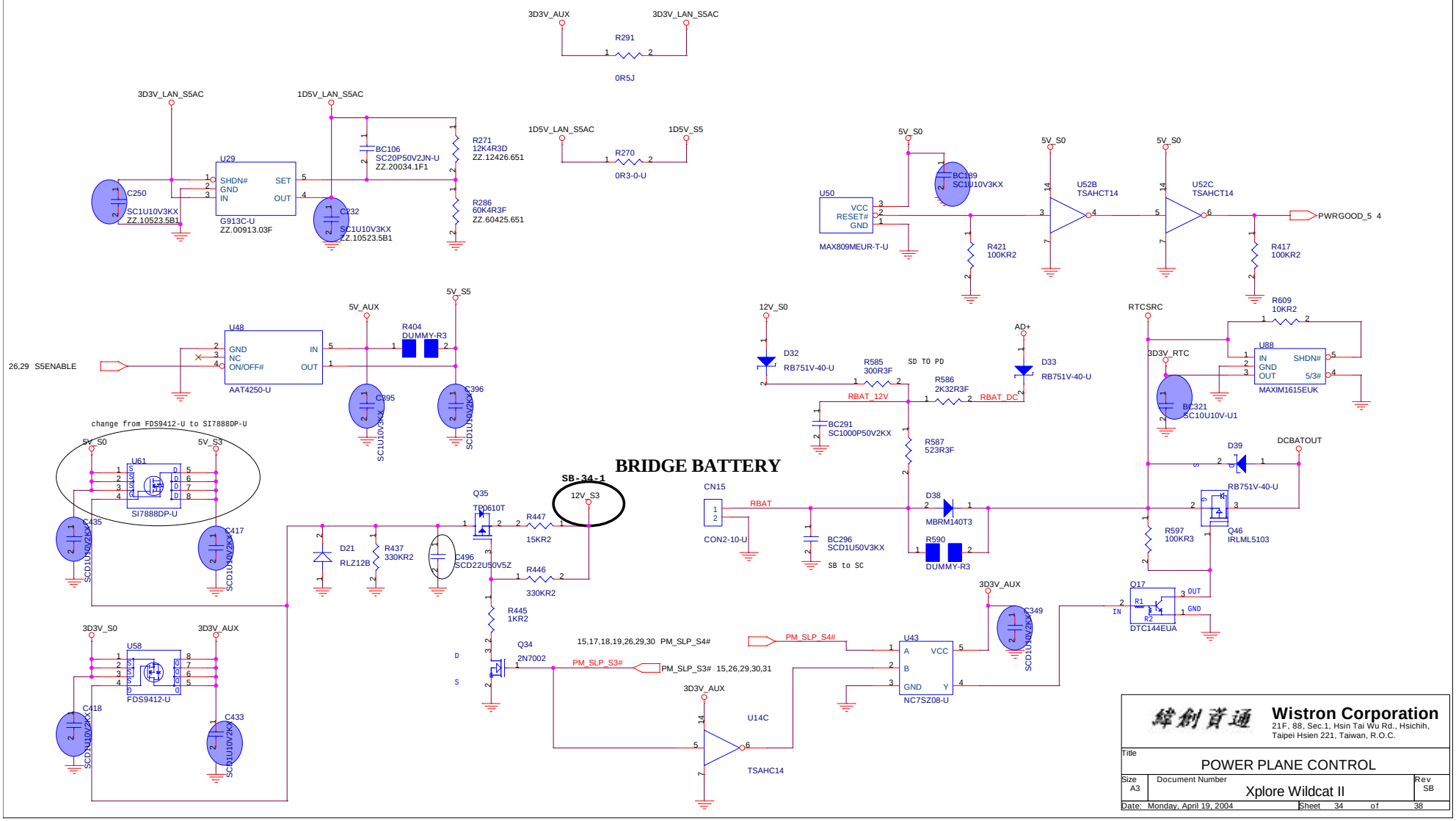

Wistron Corporation
21F, 88, Sec.1, Hsin Tai Wu Rd., Hsichih,
Taipei Hsien 221, Taiwan, R.O.C.

Title	POWER PLANE CONTROL	
Size A3	Document Number Xplore Wildcat II	Rev SB
Date: Monday, April 19, 2004	Sheet 34 of 38	

I/O PORT

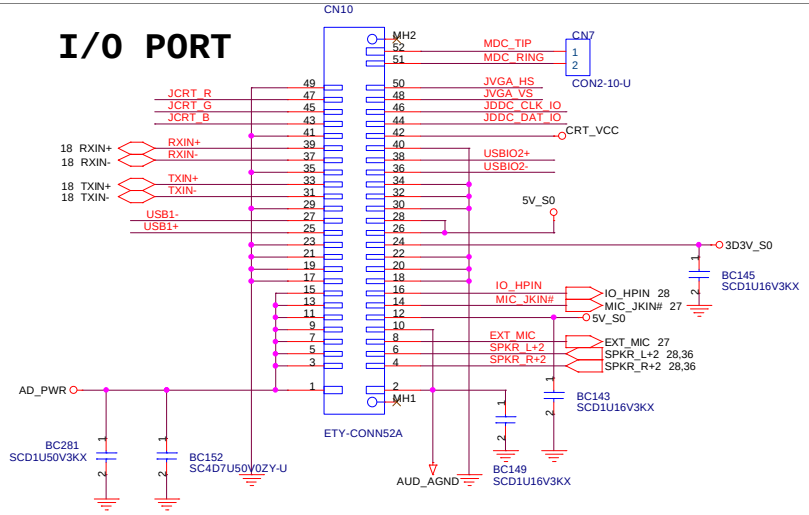

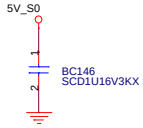

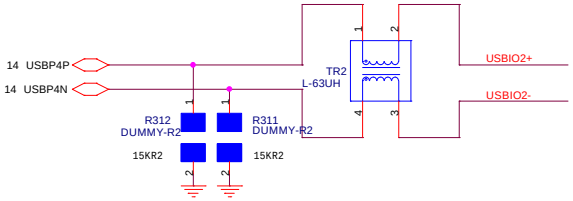

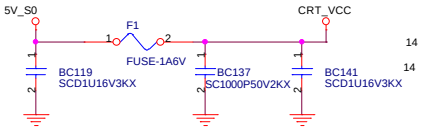

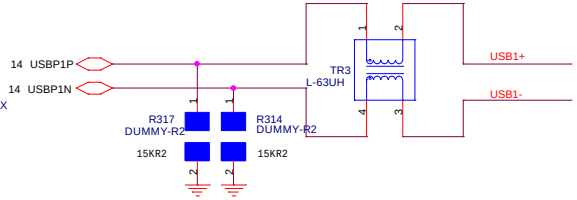

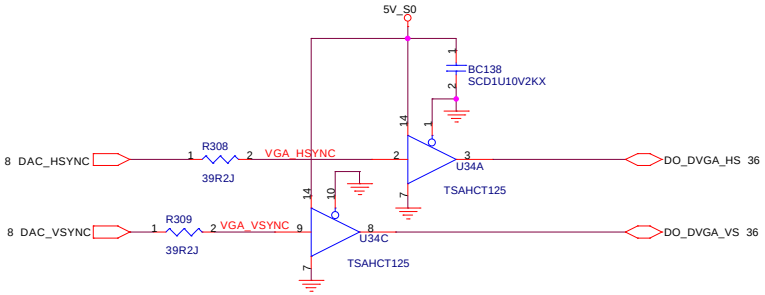

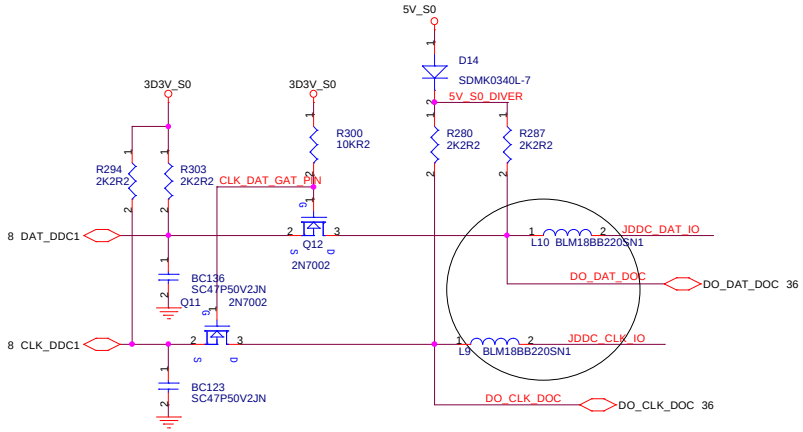

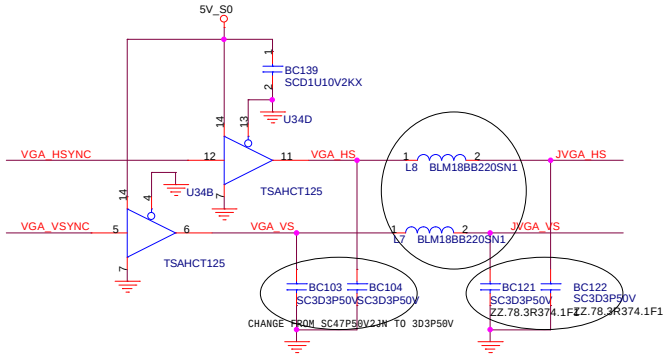

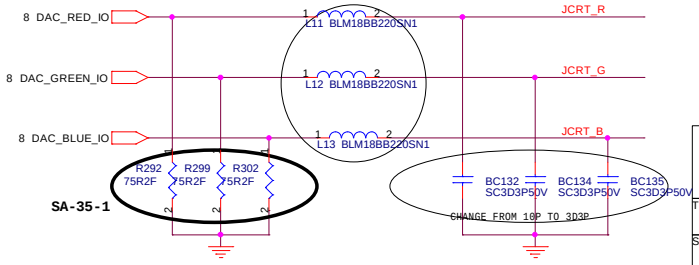

SA-35-1

Wistron Corporation
21F, 88, Sec.1, Hsin Tai Wu Rd., Hsichih,
Taipei Hsien 221, Taiwan, R.O.C.

Title	IO-PORT	
Size A3	Document Number Xplore Wildcat II	Rev SB
Date: Monday, April 19, 2004	Sheet 35 of 38	

PRM System Interface

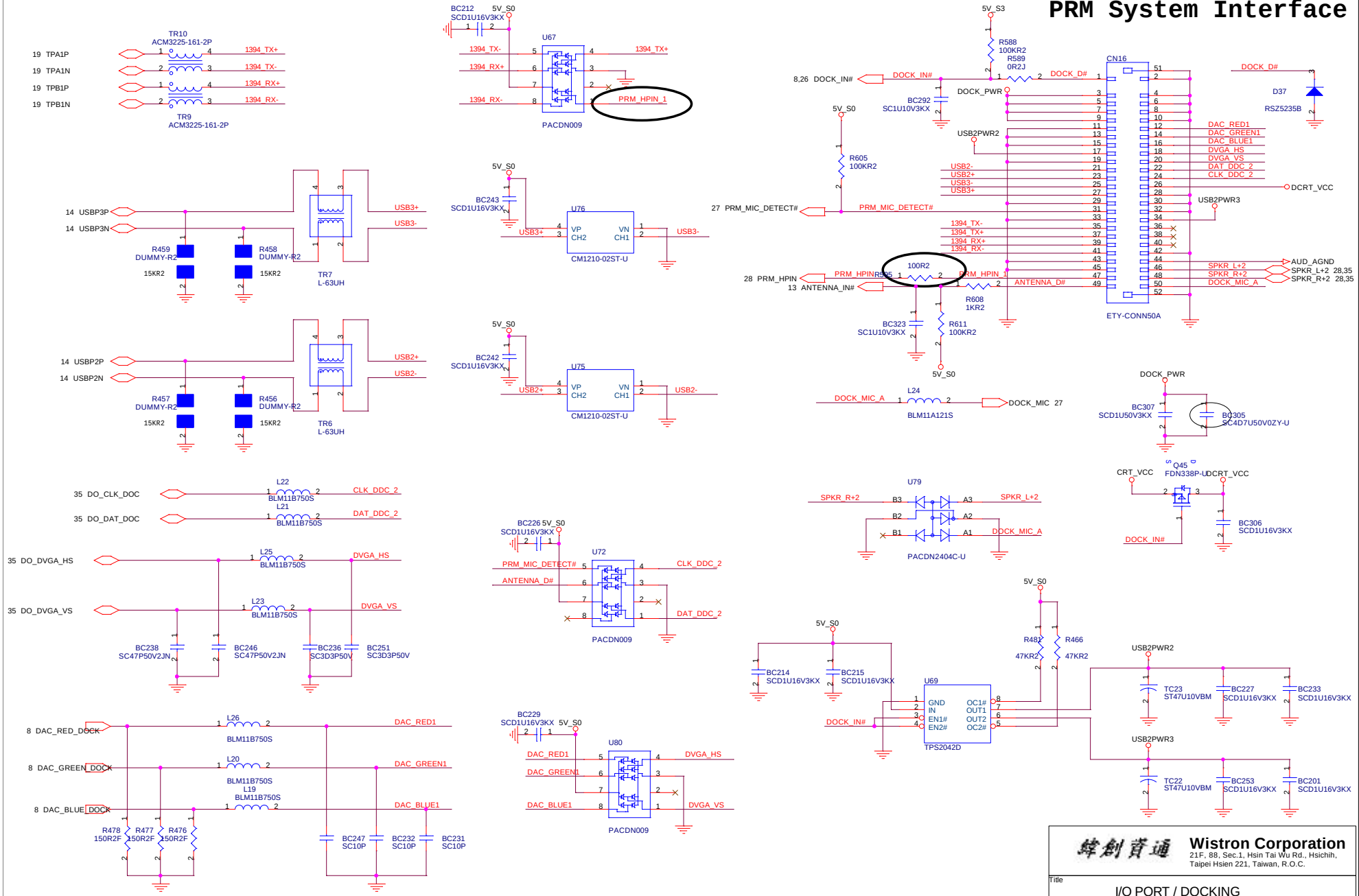

Wistron Corporation
21F, 88, Sec.1, Hsin Tai Wu Rd., Hsichih,
Taipei Hsien 221, Taiwan, R.O.C.

Title: I/O PORT / DOCKING

Size: A3 | Document Number: Xplore Wildcat II | Rev: SB

Date: Monday, April 19, 2004 | Sheet 36 of 38

Wistron Corporation
21F, 88, Sec.1, Hsin Tai Wu Rd., Hsichih,
Taipei Hsien 221, Taiwan, R.O.C.

Title: MACH. HOLE/NO USE GATE

Size: A3 | Document Number: Xplore Wildcat II | Rev: SB

Date: Monday, April 19, 2004 | Sheet 37 of 38

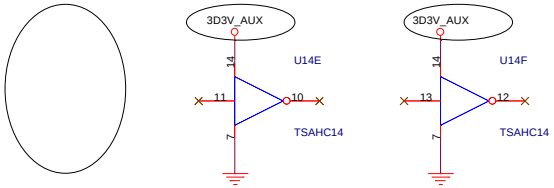

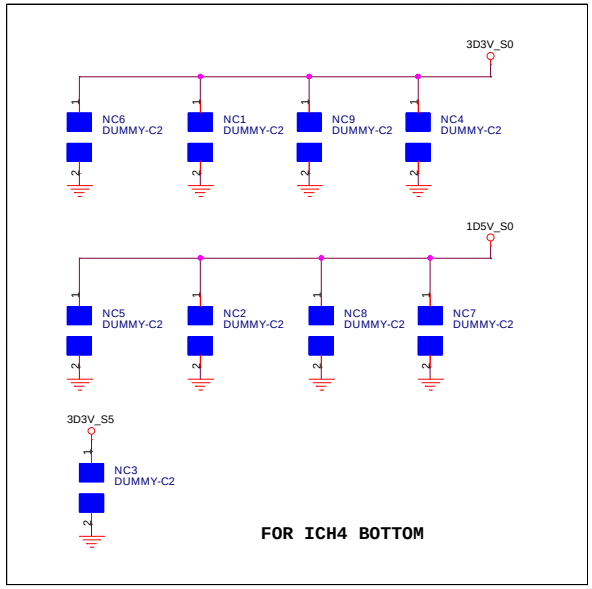

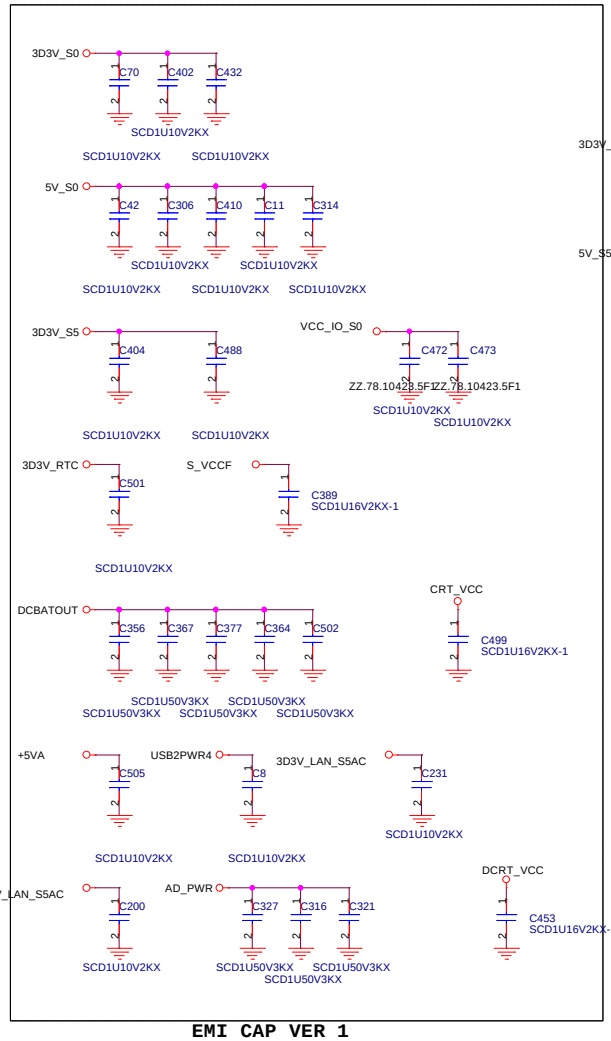

EMI CAP VER 1

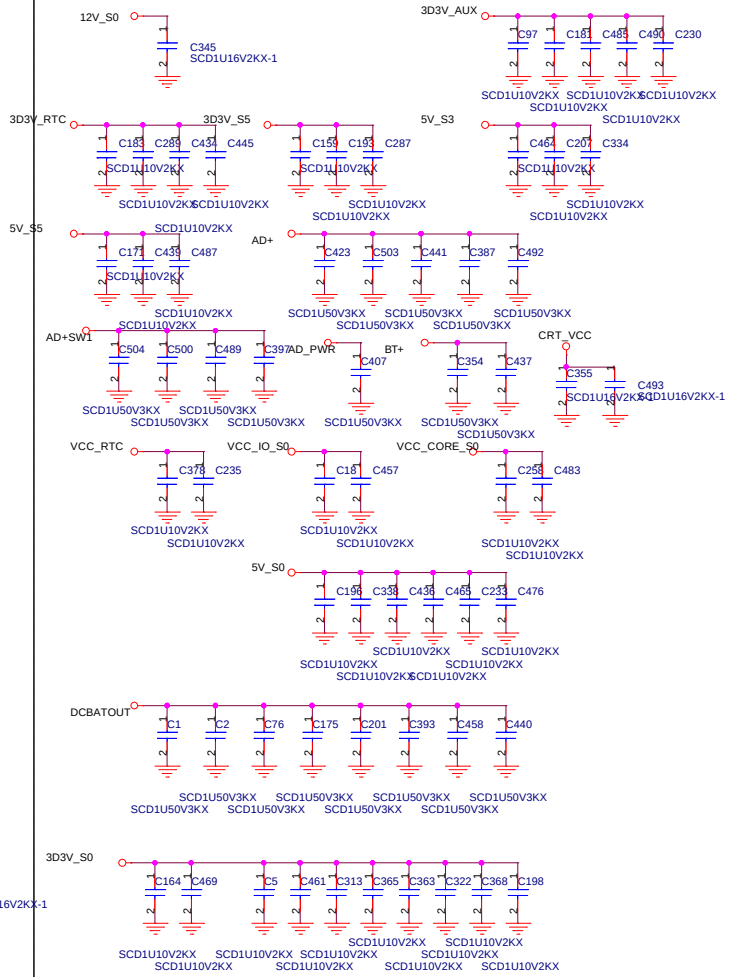

EMI CAP VER 2

蜂創資通 **Wistron Corporation**
21F, 88, Sec.1, Hsin Tai Wu Rd., Hsichih,
Taipei Hsien 221, Taiwan, R.O.C.

Title	TEST POINT	
Size A3	Document Number Xplore Wildcat II	Rev SB
Date: Monday, April 19, 2004	Sheet 38 of 38	