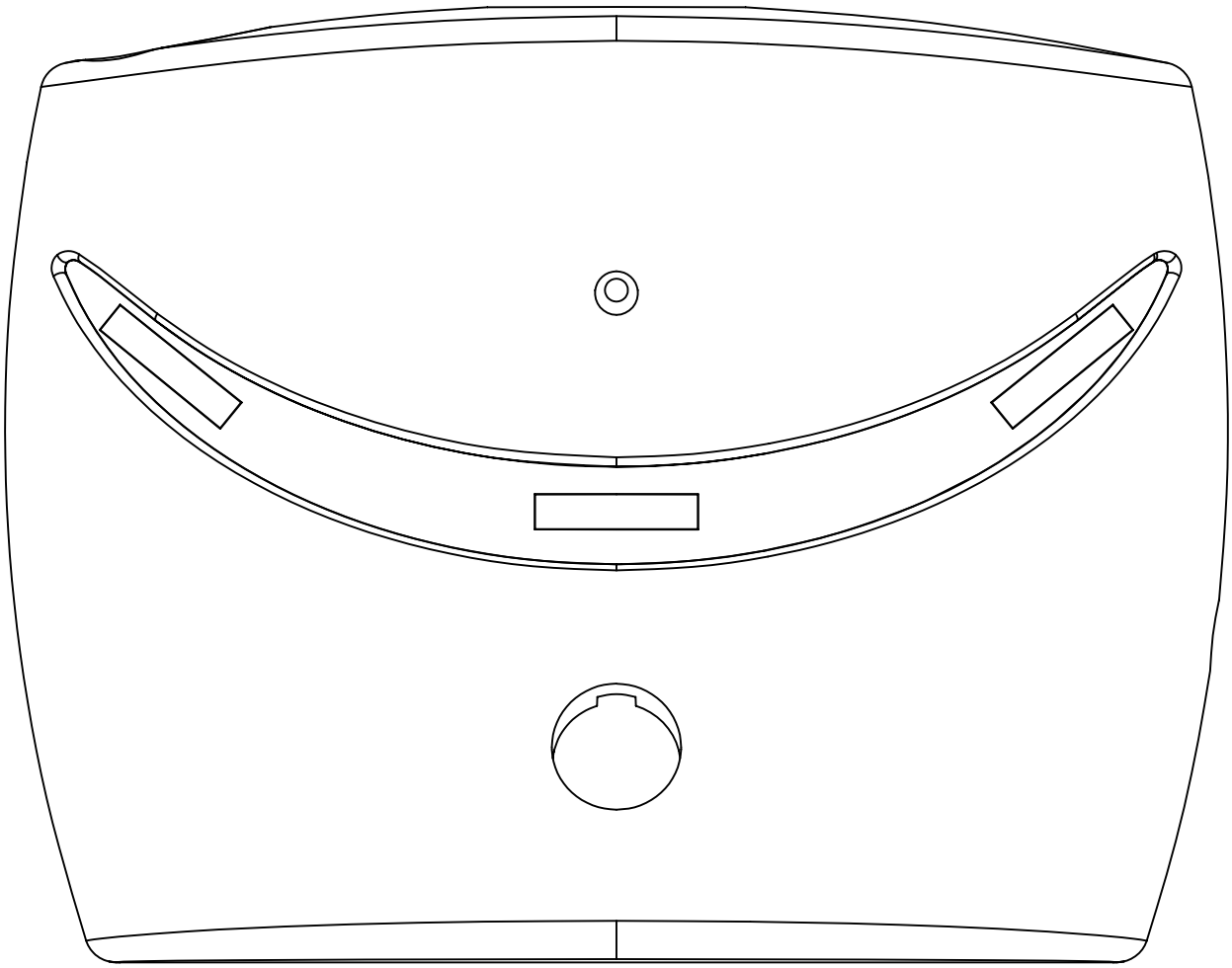

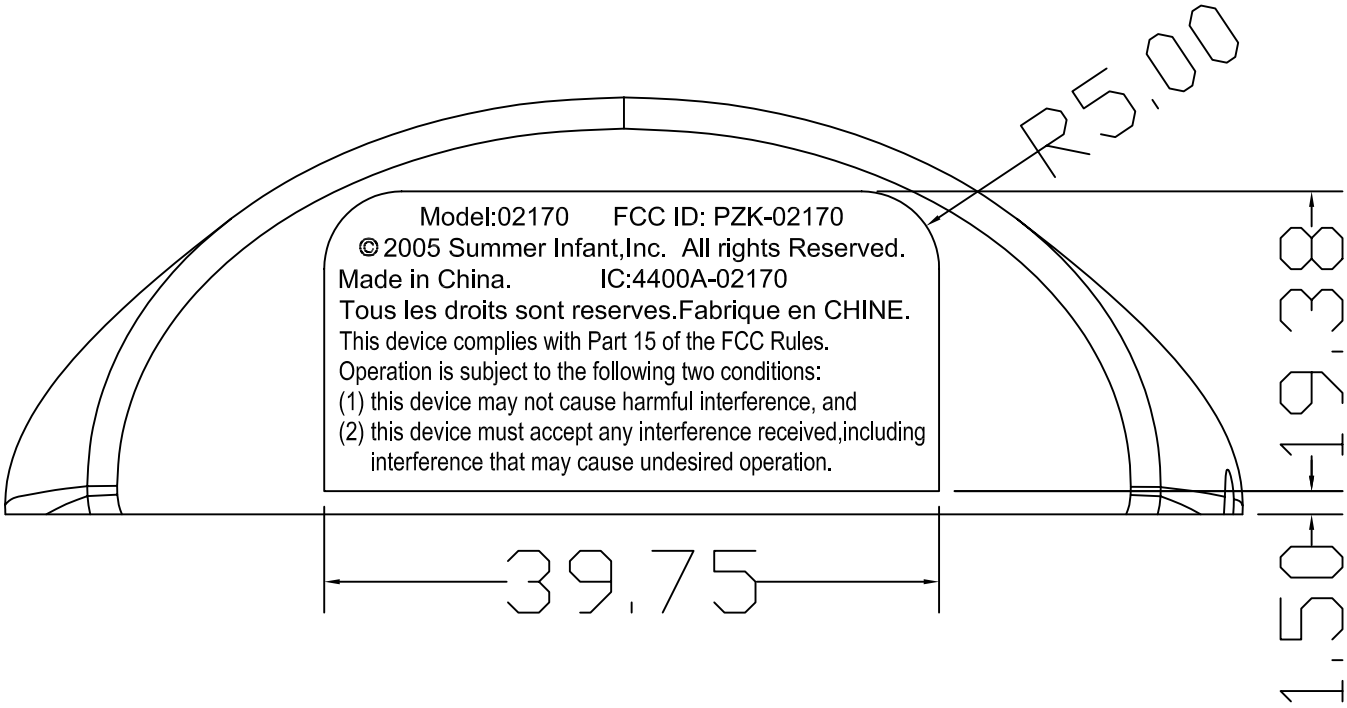
R5.00
Model:02170 FCC ID: PZK-02170
© 2005 Summer Infant,Inc. All rights Reserved.
Made in China. IC:4400A-02170
Tous les droits sont reserves.Fabrique en CHINE.
This device complies with Part 15 of the FCC Rules.
Operation is subject to the following two conditions:
(1) this device may not cause harmful interference, and
(2) this device must accept any interference received,including
interference that may cause undesired operation.
39.75
19.38
1.50

Unit: mm

Non-detachable Belt Clip (Parent Unit Rear Side)
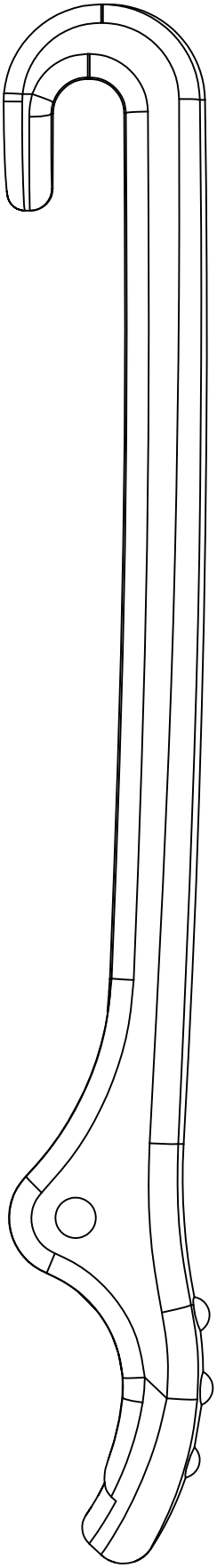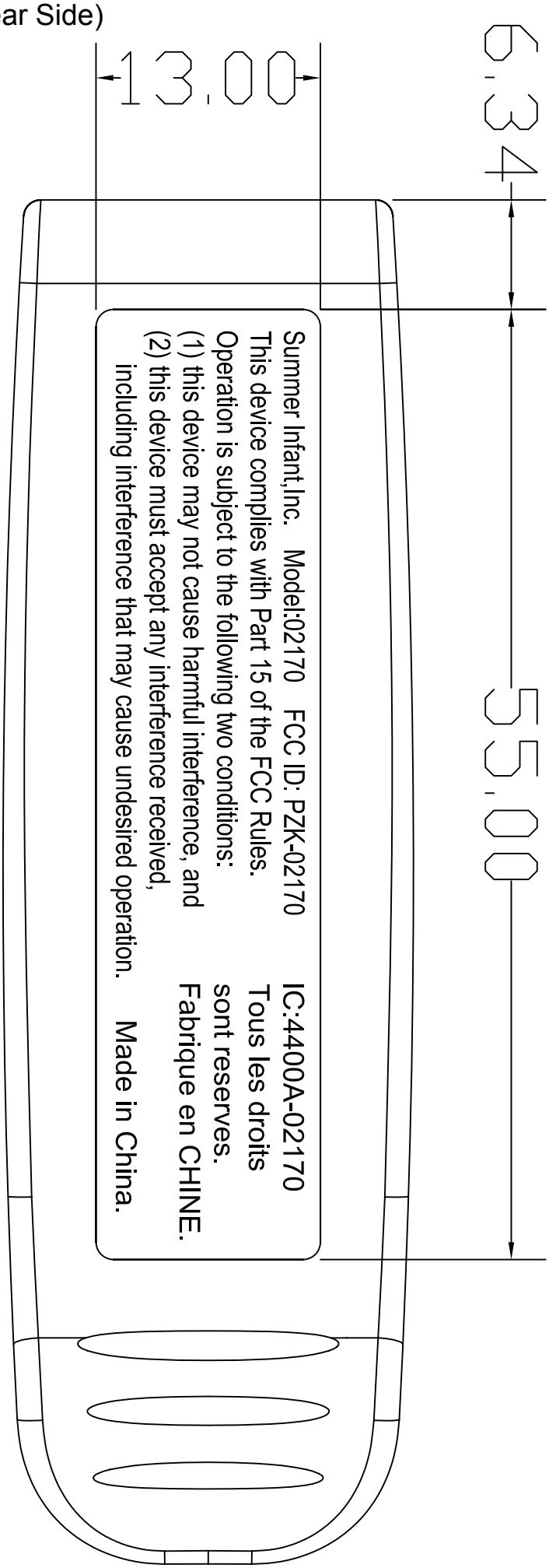
Unit: mm